iSMACONTROLLI

Control Valves & Actuators

Wide selection of control valves for room, zone, HVAC, and industrial processes with a perfectly matched range of analog, network, and smart actuators.

Control Valves & Actuators
Issue No.1.6,
November, 2024

iSMACONTROLLI

Ensure comfort and guarantee efficiency at every stage of the building control process. Reduce energy, installation and maintenance costs with a wide range of valves and actuators. Product applications range from zone and FCU control through air handling units and HVAC to industrial processes. iSMA CONTROLLI with over 80 years of experience in manufacturing Control Valves and Actuators offers a reliable and trusted solution for every building.

Contents

Linear

PICV 6
FCU Valve Sets 10
Zone Valves 12
Globe Valves 16
Fittings for Threaded Valves 21
Electro-thermal Actuators 30
Electro-mechanical Actuators 32
Accessories 38

Rotary

Motorized Ball Valves 40
Butterfly Valves 42
Rotary Actuators 42
Air Damper Actuators 44

Valves and Actuators Compatibility 46
Retrofitting 48
Valve Sizing 52

Globe Valves Overview

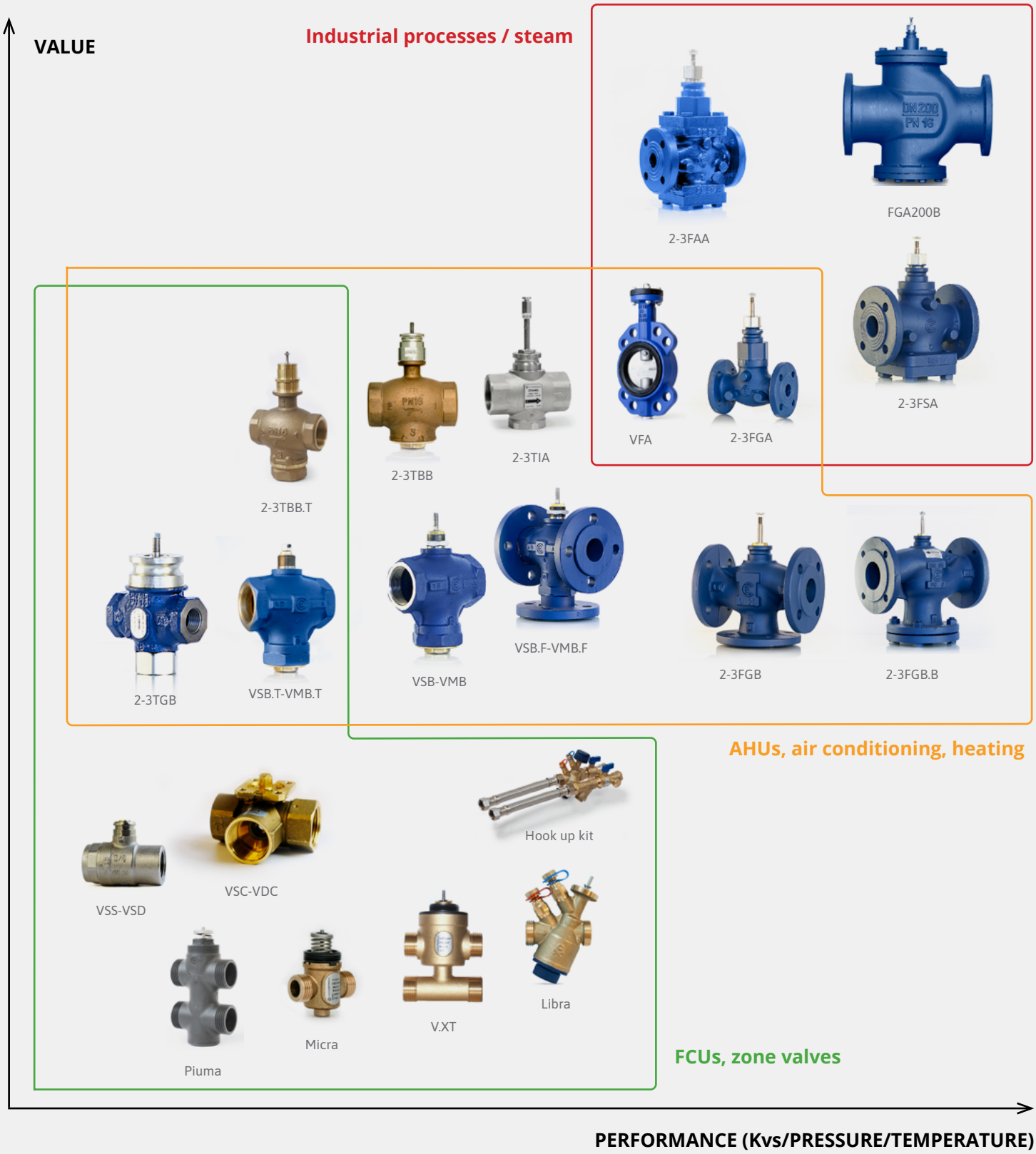

VALUE
Industrial processes / steam
MDL
MVH
Modbus
BACnet
MDA
MVE / MVE-2-RS
MDS
MDB
MVS
MVB
MVC / MVC-2-RS
MVT
AHUs, air conditioning, heating
MVX
MCA
MVR
MVP
FCUs, zone valves
FORCE/TORQUE

Pressure Independent Control Valves
Libra

Dynamic Pressure Independent Control Valves with Threaded and Flanged Connections

iSMA CONTROLLI PICVs are ideal for use in heating/cooling variable flow systems and provide constant flow regulation within a given range of differential pressure drop. Dynamic balancing eliminates overflows regardless of fluctuating pressure conditions in the system.

3 PRODUCTS IN 1

»Control valve
»Differential pressure controller
»Static flow limiting valve

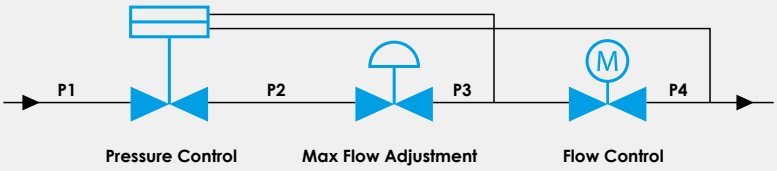

- One PICV replaces up to three separate valves (a 2-way control valve, a flow limiting valve, a differential pressure control valve)
- Optimum control in heating and cooling circuits with variable systems
- Flow rate can be precisely set at its specified design value
- Constant flow across the control valve regardless of changes in pump speed or valves closure elsewhere in the system
- Authority close to 100%
- Linear valve characteristic regardless of the preset value
- 100% stroke always available regardless of the preset value
- No cartridge design
- Very low hysteresis

Easy Selection & Commissioning

- Very quick selection among thousands of units thanks to our PICV selection tool
- Simple commissioning: it is just a matter of selecting one of the preset values on the valve caliber
- Easy pressure change measurement with our DMP700 differential pressure meter (up to 700 kPa)
- Maximum flow rate setting from the knob placed on the bottom of the valve without a need of removing the actuator

DMP700

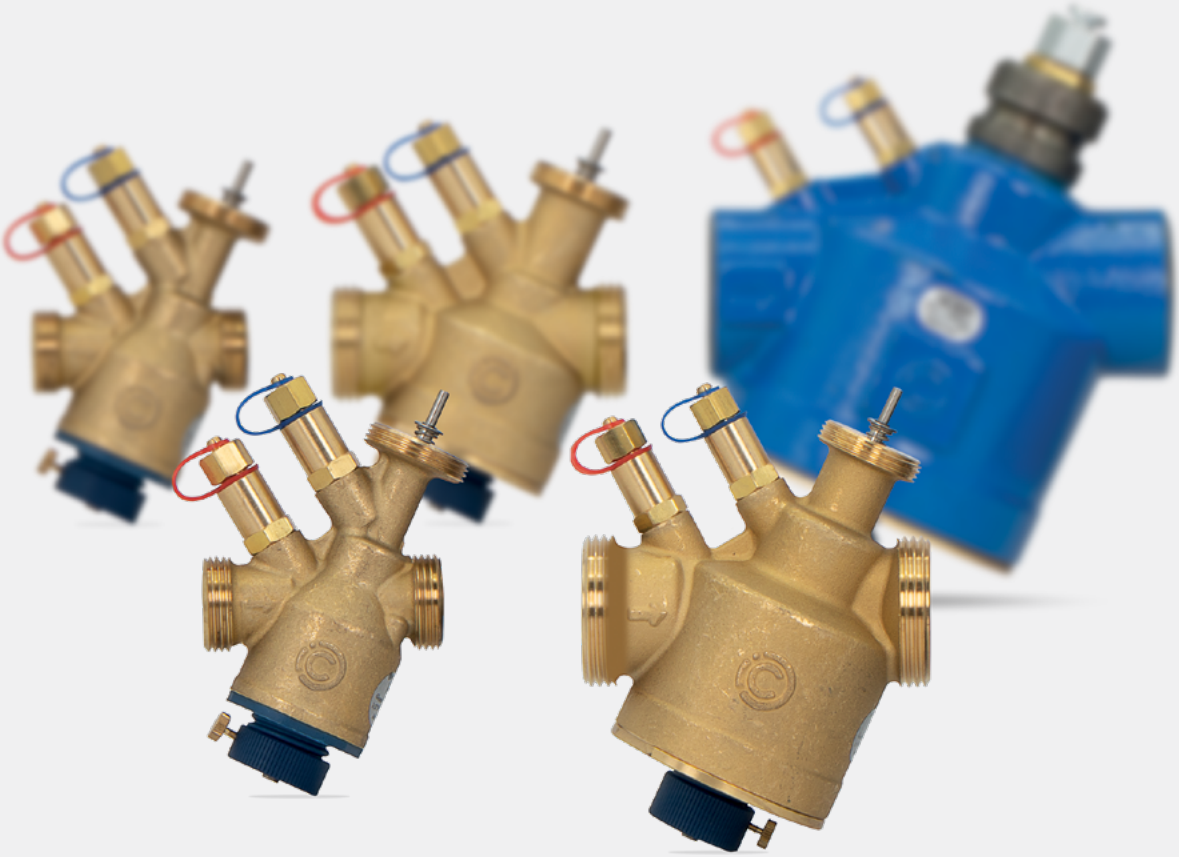

Body: CW617N brass and GJS-400 cast iron | **Plug:** AISI303 stainless steel | **Max. pressure:** 16 bar | **Temperature:** -10°C to 120°C | **Leakage:** tight close-off | **Stroke:** 4 and 15 mm | **Motorized by**: MCA, MVX52B, MVT, MVC503R, MVC503x-2-RS, MVE.04 and MVE.04-2-RS.

Model		Connection	DN	Stroke [mm]	Flow rate [l/h]		ΔP max. [kPa]	Valve body material	Compatible actuators and maximum flow rates [l/h]	
Without P/T PLUGS	With P/T PLUGS				Min.	Max.			MCA24L/230L MVR24C2/230C2 MVX52B	MVT203S/403S MVT503SB MVC503R
									Electro-thermal 90N / 140N	Electro-mechanical 300N
VLX1	VLX1P	1/2" M	15	4	100	375	600	BRASS	375	375
VLX2	VLX2P	3/4" M	15		160	800			800	800
VLX3	VLX3P	1" M	20		200	1000			1000	1000
VLX4	VLX4P	1 ¼" M	25		200	2000			2000	2000
VLX5	VLX5P	1 ½" M	32		400	4000			-	4000

Model	Connection	DN	Stroke [mm]	Flow rate [l/h]		ΔP max. [kPa]	Valve body material	Compatible actuators and maximum flow rates [l/h]			
With P/T PLUGS				Min.	Max.			MVE504S MVE504SR	MVE204S MVE204SR	MVE504S-65 MVE504SR-65	MVE204S-65 MVE204SR-65
								Electro-mechanical 400N			
VLX6P	1 ½" F	40	15	1100	10000	800	CAST IRON	10000	10000	10000	10000
VLX8P	2" F	50		2200	12500			12500	12500	12500	12500

ATTENTION - If MVX52B is not powered, PICV is OPEN, and if MCA24L/MCA230L is not powered, PICV is CLOSED.

Pressure Independent Control Valves
EBV

ENERGY VALVE

USB PORT

Modbus

Key Features

Description	PICV (EBV.0)	Energy control valve (EBV.1)
Pressure independent control	●	●
Energy monitoring	-	●
Pressure transducers (x2)	●	●
Temperature sensors (x2)	-	●
P/T test points	●	●
Flow rate calculation	●	●
Minimum and maximum flow value setting	●	●
Analog inputs (0-10 V DC, 4-20 mA)	●	●
Modbus connectivity	●	●
Valve control and feedback via Modbus	●	●
DeltaT (temperature difference between supply and return water) limit control loop	-	●
Power (kW) and energy (kWh) calculation of the heat exchanger	-	●
Power (kW) and energy (kWh) control	-	●
Remote monitoring of energy consumption	-	●
Configuration through micro USB	●	●

EBV valves represent an innovative solution to manage the efficiency of cooling and heating circuits. The key functions are: pressure independent flow control and energy control.
The EBV is equipped with a smart actuator with Modbus connectivity, micro USB port, PID control loop, analog inputs (0-10 V DC, 2-10 V DC, 4-20 mA).
Modbus connectivity allows an integration of the EBV into BMS and makes commissioning and monitoring activities very easy. Configuration of the EBV can also be achieved through the micro USB port.

Body: GJL-250 cast iron | **Plug:** CW617N brass and CB491K bronze | **Max pressure:** 16 bar | **Temperature:** -10°C to 120°C | **Leakage:** 0,03%

Model	DN	Min. flow [m³/h]	Max. flow [m³/h]	PN	Max. ΔP [kPa]	Power supply
EBV65	65	12	37	16	35-800	24 V AC/DC 230 V AC
EBV80	80	25	59			
EBV100	100	45	77			
EBV125	125	61	118			
EBV150	150	80	177			

65 = DN65, max. flow 37 m³/h
80 = DN80, max. flow 59 m³/h
100 = DN100, max. flow 77 m³/h
125 = DN125, max. flow 118 m³/h
150 = DN150, max. flow 177 m³/h

024 = Power supply 24 V AC/DC
230 = Power supply 230 V AC

EBVXX-XXX-X0X

0 = No emergency return
1 = With emergency return

0 = Modbus connection

0 = No temperature sensors
1 = With temperature sensors

Example: **EBV65-024-001** → max. flow 37 m³/h, DN65, 24 V AC/DC, no emergency return, with Modbus connection, with energy function enabled and 2 temperature sensors included

Configurations

PICV

Smart actuator

Pressure sensors

Control valve

Example: **EBV65-024-000**

Pressure sensors for pressure independent flow control

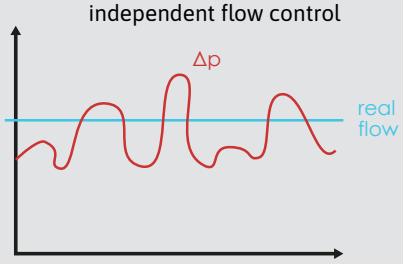

ENERGY CONTROL VALVE

Smart actuator

Pressure sensors

Control valve

Temperature sensors

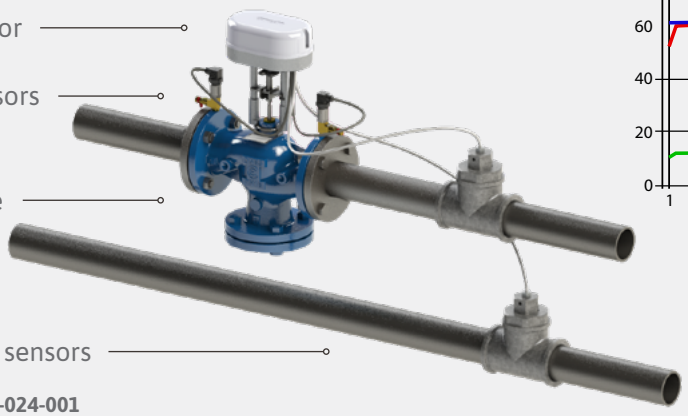

Example: **EBV65-024-001**

Supply & return temperature sensor for energy monitoring and ΔT control

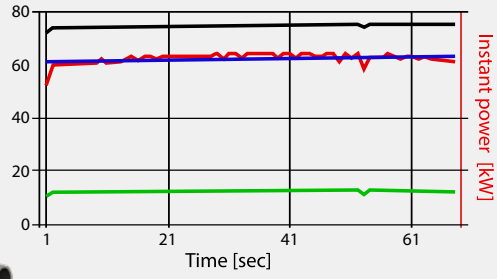

Connectivity

COMMISSIONING

CONV-USB-RS485

CONFIGURATOR TOOL

OPERATION

Modbus RTU

TOUCH PANEL

MODBUS MASTER DEVICE

FCU Valve Sets

Code		Description
BP15-x-xxxx		FCU valve set PN16 1/2"F for VLX1, VLX1P, VLX2 and VLX2P
BP20-x-xxxx		FCU valve set PN16 3/4"F for VLX3, VLX3P, VLX4 and VLX4P
BP25-x-xxxx		FCU valve set PN16 1"F for VLX4, VLX4P, VLX5 and VLX5P
ACCESSORIES	Flex15-10	3/4"F - 1/2"F flexible hose, 300 mm, PN10, temperature max 85°C
	Flex15-16	3/4"F - 1/2"F stainless-steel flexible hose, 300 mm, PN16, temperature max 95°C
	Flex20-10	1"F - 3/4"F flexible hose, 300 mm, PN10, temperature max 85°C
	Flex20-16	1"F - 3/4"F stainless-steel flexible hose, 300 mm, PN16, temperature max 95°C
	Flex25-10	1 ¼"F - 1"F flexible hose, 300 mm, PN10, temperature max 85°C
	Flex25-16	1 ¼"F - 1"F stainless-steel flexible hose, 300 mm, PN16, temperature max 95°C
	COIB15	Thermal insulation for DN15 FCU valve set with VLX1, VLX1P, VLX2 and VLX2P valve
	COIB20	Thermal insulation for DN20 FCU valve set with VLX3 and VLX3P valve
	COIB25	Thermal insulation for DN25 FCU valve set with VLX4 and VLX4P valve
	COIB20H	Thermal insulation for DN20 FCU valve set with VLX4 and VLX4P valve
	COIB25H	Thermal insulation for DN25 FCU valve set with VLX5 and VLX5P valve

ISMA CONTROLLI FCU valve sets are designed to connect a fan coil unit directly into a building's chilled water or hot water network.
Each kit includes an inbuilt factory-assembled set of valves and accessories in order to reduce on site installation and commissioning times and to prevent potential future system leakage from fan coil unit systems. It may also include a balancing valve with pressure tests points, installed on a return line.
All necessary components are installed as a single item, which is then 100% pressure-tested in the factory prior to delivery to site.
No specific tools are needed for installation. A built-in bypass section includes a full port isolating valve to enable coil and circuit flushing and cleaning to be carried out without a need to switch off the attached fan coil unit.
Thermal insulation can be added too.

Technical characteristics

Material: CW617N brass
Pressure class: PN10 or PN16 (depends on the flexible hoses fitted)
Fluid temperature range: 0°C to 95°C (depends on the flexible hoses fitted)

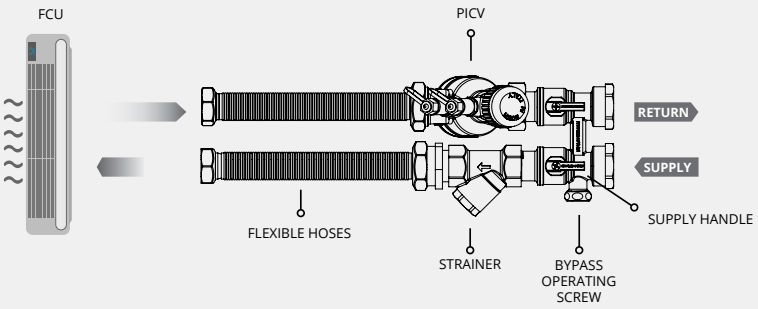

BPXX-X-XXXX

15 = DN15
20 = DN20
25 = DN25

1 = VLX1 valve
1P = VLX1P valve
2 = VLX2 valve
2P = VLX2P valve
3 = VLX3 valve
3P = VLX3P valve
4 = VLX4 valve
4P = VLX4P valve
5 = VLX5 valve
5P = VLX5P valve

0 = without flexible hoses
1 = with flexible hoses PN10
2 = with flexible hoses PN16

0 = without Venturi flow meter
1 = with Venturi flow meter

0 = without thermal insulation
1 = with thermal insulation

0 = strainer without drain valve
1 = strainer with drain valve

Example: FCU valve set DN15 1/2"F + PICV VLX2P + Flexible hoses PN10 + Insultation → **BP15-2P-1001**

Creating a FCU Valve Sets is as easy as 1 2 3

1 SELECT YOUR BYPASS

To make it easy, we have reduced the range to three models only, all including a bypass valve and isolation valves to allow different directions of the water as needed during the normal operation of the terminal unit as well as flushing, cleaning or isolation for maintenance operations. Compact design suitable also for installations with limited space.

2 SELECT YOUR VALVE AND ACTUATOR

Valve type and size need to be selected according to the nominal flow rates.
You can choose between the full range of LIBRA PICV from DN15 up to DN32 according to the requested design flowrate.
On request it is possible to create your FCU valve sets with others 2-way or 3-way valves. Please contact us for more information.

3 CHOOSE YOUR OPTIONS

We can fit hoses with different PN rating in order to match closely your FCU dimensions.
Having all parts already assembled in our factory will save a lot of installation time on site.
See below what options are available and build your ordering part number.

Code	Dimension "A"	Threaded connections		Valve		Actuator		Flexible hose		Venturi pipe		Strainer with drain valve		Thermal insulation
				Model	Kvs	Series								
BP15	50 mm	1/2"	+	**VLX1** or **VLX1P**	100 ÷ 375 l/h	MCA and MVR (Thermal) MVT403S, MVT203S, MVT503SB, MVC503R and MVC-2-RS (Electro-mechanical)	+	**Flex15-10** or **Flex15-16**		Flow15		Flush15		COIB15
				VLX2 or **VLX2P**	145 ÷ 800 l/h									
BP20	50 mm	3/4"	+	**VLX3** or **VLX3P**	200 ÷ 1000 l/h	MCA and MVR (Thermal) MVT403S, MVT203S, MVT503SB, MVC503R and MVC-2-RS (Electro-mechanical)	+	**Flex20-10** or **Flex20-16**	+	Flow20	+	Flush20	+	COIB20
				VLX4 or **VLX4P**	200 ÷ 2000 l/h									COIB20H
BP25	80 mm	1"	+	**VLX4** or **VLX4P**	200 ÷ 2000 l/h	MCA and MVR (Thermal) MVT403S, MVT203S, MVT503SB, MVC503R and MVC-2-RS (Electro-mechanical)	+	**Flex25-10** or **Flex25-16**		Flow25		Flush25		COIB25
				VLX5 or **VLX5P**	400 ÷ 4000 l/h									COIB25H

PICV

2-way (on request)

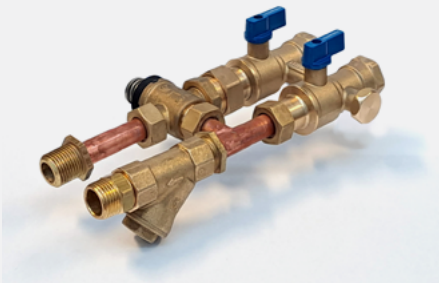

3-way (on request)

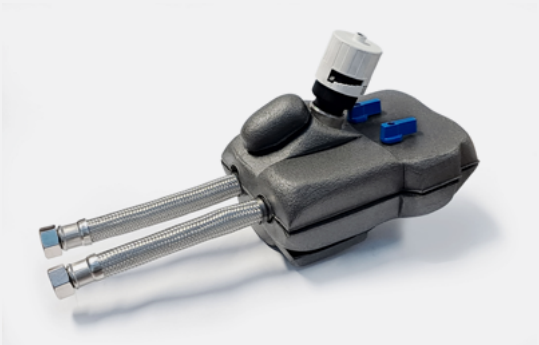

Thermal insulation

Valves for Fan Coil Units
Piuma

TIGHT CLOSE-OFF

UNIQUE SOLUTION IN OUR MARKET!

PN16 Valves in High Performance Composite for FCUs

- 0% lead, therefore fully compliant with ROHS and REACH
- No rust
- High thermic insulation
- No condensation
- High resistance to dirty water
- Light weight

Body: composite polymer | **Plug:** composite polymer | **Max. pressure:** 16 bar | **Temperature:** 5°C to 95°C | **Leakage:** tight close-off | **Stroke:** 4 mm | **Motorized by:** MVP and MVX52B

Model		Mixing			Diverting			
		Kvs [m³/h]		Close-off [bar]	Kvs [m³/h]		Close-off [bar]	Max. ΔP without noise
		Direct way	Angle way	MVP	Direct way	Angle way	MVP	
2-way	VPS16P	1.6	-	3.5	-	-	-	-
	VPS25P	2.5	-	3.5	-	-	-	-
3-way	VPM16P	1.6	1	3.5	1.6	0.5	0.8	0.6
	VPM25P	2.5	1.6	3.5	2.5	0.6	0.2	0.2
3-way with built-in bypass (4 ports)	VPT16P	1.6	1	3.5	1.6	0.5	0.8	0.6
	VPT25P	2.5	1.6	3.5	2.5	0.6	0.2	0.2

ATTENTION: If MVX52B is not powered, Piuma valve is OPEN, and if MVP actuator is not powered, Piuma valve is CLOSED.

Micra®

Compact Zone Valves for FCUs

Micra® is our successful range of motorized valves for fan coil units.
Range consists of PN16 brass (CW617N) valve bodies with compact dimensions: 2-way, 3-way, 3-way 4-ports with sizes 1/2", 3/4" and 1" (2-way and 3-way only) and Kvs from 0.25 to 6.
Valves are 100% tight close-off.

All valve bodies are available with either flat end threaded connections or conic (Conex).

4-ports versions (3-way with bypass) are available with different port-to-port distances (C)

1/2" models with Kvs up to 1.6:	35 mm or 40 mm distance
3/4" models with Kvs up to 2.5:	40 mm or 50 mm distance
3/4" models with Kvs up to 6:	44 mm distance

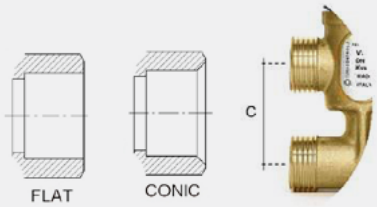

VSX (2-way), VMX (3-way), VTX (3-way 4-ports)

- Valves with 2.5 mm stroke
- For electro-thermal actuators (On/Off or modulating)
- Totally silent
- Spring return (normally open & normally closed depending on actuator models)
- No friction, no wear
- Price competitive solution

VSXT (2-way), VMXT (3-way), VTXT (3-way 4-ports)

- Valves with 5.5 mm stroke
- For electro-mechanical actuators
- Faster opening/closing times
- Higher close-off
- Better modulating control
- 3-position control also available

V.X PN16 Valve Bodies with 2.5 mm Stroke

Body: CW617N brass | **Plug:** PPS-GF50 and CW617N brass | **Max. pressure:** 16 bar | **Temperature:** 5°C to 95°C | **Leakage:** tight close-off | **Stroke:** 2.5 mm | **Motorised by:** MVX and MVR.V

Model	Kvs		Close-off [bar]	Threaded connections	Tight	Action type on direct way
	Direct way	Angle way				
VSX09P	0.25	-	4	G 1/2" M	flat	2-way n.c.
VSX10P	0.4	-	4	G 1/2" M	flat	
VSX11P	0.6	-	4	G 1/2" M	flat	
VSX12P	1	-	3.5	G 1/2" M	flat	
VSX13	1.6	-	3.5	G 1/2" M	conic	
VSX13P	1.6	-	3.5	G 1/2" M	flat	
VSX21	2.5	-	3.5	G 3/4" M	conic	
VSX21P	2.5	-	3.5	G 3/4" M	flat	
VSX24P	4	-	1.5	G 3/4" M	flat	
VSX26P	6	-	1.5	G 3/4" M	flat	
VSX28P	6	-	1.5	G 1" M	flat	
VMX09P	0.25	0.25	4	G 1/2" M	flat	3-way
VMX10P	0.4	0.4	4	G 1/2" M	flat	
VMX11P	0.6	0.6	4	G 1/2" M	flat	
VMX12P	1	0.6	3.5	G 1/2" M	flat	
VMX13	1.6	1	3.5	G 1/2" M	conic	
VMX13P	1.6	1	3.5	G 1/2" M	flat	
VMX21	2.5	1.6	3.5	G 3/4" M	conic	
VMX21P	2.5	1.6	3.5	G 3/4" M	flat	
VMX24P	4	2.5	1	G 3/4" M	flat	
VMX26P	6	4	1	G 3/4" M	flat	
VMX28P	6	4	1	G 1" M	flat	
VTX09P[1)]	0.25	0.25	4	G 1/2" M	flat	3-way 4-ports
VTX10P[1)]	0.4	0.4	4	G 1/2" M	flat	
VTX11P[1)]	0.6	0.6	4	G 1/2" M	flat	
VTX12P[1)]	1	0.6	3.5	G 1/2" M	flat	
VTX13	1.6	1	3.5	G 1/2" M	conic	
VTX13P[1)]	1.6	1	3.5	G 1/2" M	flat	
VTX21	2.5	1.6	3.5	G 3/4" M	conic	
VTX21P[1)]	2.5	1.6	3.5	G 3/4" M	flat	
VTX24P	4	2.5	1	G 3/4" M	flat	
VTX26P	6	4	1	G 3/4" M	flat	

TIGHT CLOSE-OFF

Close-off values refer to the direct way, for angle way values see the datasheet.

1) These models are also available with 40 mm port-to-port distance (C). When ordering 40 mm distance version, add "4" at the end of the model code, e.g., VTX21P4. See also the picture on page 13.

V.XT PN16 Valve Bodies with 5.5 mm Stroke

Body: CW617N brass | **Plug:** PPS-GF50 | **Max. pressure:** 16 bar | **Temperature:** 5°C to 95°C | **Leakage:** tight close-off | **Stroke:** 5,5 mm | **Motorized by:** MVT and MVC503R

TIGHT CLOSE-OFF

Model[1]	Kvs		Close-off [bar]	Threaded connections	Tight	Action type Direct way
	Direct way	Angle way				
VSXT09P	0.25	-	4	G 1/2" M	flat	2-way n.c
VSXT10P	0.4	-	4	G 1/2" M	flat	
VSXT11P	0.6	-	3.5	G 1/2" M	flat	
VSXT12P	1	-	3.5	G 1/2" M	flat	
VSXT13P	1.6	-	3.5	G 1/2" M	flat	
VSXT1P	2	-	3.5	G 1/2" M	flat	
VSXT21P	2.5	-	3.5	G 3/4" M	flat	
VSXT24P	4	-	1.5	G 3/4" M	flat	
VSXT26P	6	-	1.5	G 3/4" M	flat	
VSXT28P	6	-	1.5	G 1" M	flat	
VMXT09P	0.25	0.25	4	G 1/2" M	flat	3-way
VMXT10P	0.4	0.25	4	G 1/2" M	flat	
VMXT11P	0.6	0.4	3.5	G 1/2" M	flat	
VMXT12P	1	0.6	3.5	G 1/2" M	flat	
VMXT13P	1.6	1	3.5	G 1/2" M	flat	
VMXT1P	2	1.6	3.5	G 1/2" M	flat	
VMXT21P	2.5	1.6	3.5	G 3/4" M	flat	
VMXT24P	4	2.5	1	G 3/4" M	flat	
VMXT26P	6	4	1	G 3/4" M	flat	
VMXT28P	6	4	1	G 1" M	flat	
VTXT09P[1]	0.25	0.25	4	G 1/2" M	flat	3-way 4-ports
VTXT10P[1]	0.4	0.25	4	G 1/2" M	flat	
VTXT11P[1]	0.6	0.4	3.5	G 1/2" M	flat	
VTXT12P[1]	1	0.6	3.5	G 1/2" M	flat	
VTXT13P[1]	1.6	1	3.5	G 1/2" M	flat	
VTXT1P[1]	2	1.6	3.5	G 1/2" M	flat	
VTXT21P[1]	2.5	1.6	3.5	G 3/4" M	flat	
VTXT24P	4	2.5	1	G 3/4" M	flat	
VTXT26P	6	4	1	G 3/4" M	flat	

Close-off values refer to the direct way, for angle way values see the datasheet.
All V.XT valves are available with a conic connection. When ordering this version, ignore the letter "P" at the end of the model code; e.g. VSXT21.

1) These models are also available with 40 mm port-to-port distance (C). When ordering 40 mm distance version, add "4" at the end of the model code, e.g., VTXT21P4. See also the picture on page 13.

2TGB.B and 2TGB.F PN16 Threaded Valve

Body: GJL-250 cast iron | **Plug:** CW614N brass | **Max. pressure:** 16 bar | **Temperature:** -5°C[1)] to 140°C | **Leakage:** 0 to 0.001% Kvs | **Stroke:** 11.5 mm | **Motorized by:** MVB, MVC and MVE.S

Model	DN	Kvs	Max. differential pressure [bar]			Other features
			MVC.03	MVB	MVE.S	
2TGB15BR00	1/2"	0.4	13.7	11.6	-	• Equal-percentage control flow characteristic • Internal threaded connections: fluid temp. -5[1)] to 140°C, with MVB max. 120°C (140°C with MVB+MVBHT) • For MVT203, MVT403, MVT503 using AG74-03 adapter
2TGB15BR0	1/2"	0.63				
2TGB15BR1	1/2"	1				
2TGB15BR2	1/2"	1.6				
2TGB15BR3	1/2"	2.5				
2TGB15B	1/2"	4				
2TGB15FR00	1/2"	0.4	-	-	16	• Equal-percentage control flow characteristic • Internal threaded connections: fluid temp. -5[1)] to 140°C
2TGB15FR0	1/2"	0.63				
2TGB15FR1	1/2"	1				
2TGB15FR2	1/2"	1.6				
2TGB15FR3	1/2"	2.5				
2TGB15F	1/2"	4				

In order to avoid seat & plug wearing issues, we recommend not to exceed 4 bar differential pressure.
1) For applications with negative temperature fluid, use the stem heater, 244 or 248.

VSB (Threaded) and VSB.F (Flanged) PN16 Valve

Body: GJL-250 cast iron | **Plug:** CW617N brass | **Max. pressure:** 16 bar | **Temperature:** -10°C[1)] to 150°C | **Leakage:** 0.03% Kvs | **Stroke:** 16.5 mm (18.5 mm max) | **Motorized by:** MVB, MVE and MVH

Mod.	DN	Kvs	Max. differential pressure [bar]							Other features
			MVB	MVE.06(R)	MVE.10(R)	MVE.15(R)	MVH	MVH56EA MVH56EC	MVE.22	
VSB3	3/4"	6.3	10.8	16	16	16	16	16	16	• With MVB max. fluid temperature 120°C (140°C with MVB+MVBHT) • Equal-percentage control flow characteristic • For MVE actuator, add AG52 linkage • For MVH actuator, add AG62 linkage • For MVE.S actuator, add AG63 linkage
VSB4	1"	10	6.8	11.9	16	16	16	13.8	16	
VSB5	1 ¼"	16	4.1	7.2	12.1	16	16	8.4	16	
VSB6	1 ½"	22	2.9	5	8.6	13	11.7	5.9	16	
VSB8	2"	30	2.1	3.7	6.4	9.6	8.7	4.4	14.3	
VSB8A	2"	40	2.1	3.7	6.4	9.6	8.7	4.4	14.3	
VSB3F	20	6.3	10.8	16	16	16	16	16	16	• As above but with slip-on flanges
VSB4F	25	10	6.8	11.9	16	16	16	13.8	16	
VSB5F	32	16	4.1	7.2	12.1	16	16	8.4	16	
VSB6F	40	22	2.9	5	8.6	13	11.7	5.9	16	
VSB8F	50	30	2.1	3.7	6.4	9.6	8.7	4.4	14.3	
VSB8AF	50	40	2.1	3.7	6.4	9.6	8.7	4.4	14.3	

In order to avoid seat & plug wearing issues, we recommend not to exceed 4 bar differential pressure.
1) For applications with negative temperature fluid, use the stem heater, 244 or 248.

VSB.T PN16 Valve

Body: GJL-250 cast iron | **Plug:** CW617N brass | **Max. pressure:** 16 bar | **Temperature:** 5°C to 95°C | **Leakage:** 0.03% Kvs | **Stroke:** 5.5 mm | **Motorised by:** MVC.03 and MVC503R

Model	DN	Kvs	Max. diff. pressure [bar]	Other features
			MVC	
VSB3T	3/4"	6.3	9	• Linear control characteristic
VSB4T	1"	10	5.5	
VSB5T	1 ¼"	14	3.5	
VSB6T	1 ½"	18	2.5	
VSB8T	2"	25	1.9	

Old VSBT3, VSBT4, VSBT5, VSBT6 (motorized by MVT44, MVT28, MVT56 and MVT57 actuators) still available as spare parts.

2TGA.BT PN16 Valve for High Close-off Applications

Body: GJL-250 cast iron | **Plug:** AISI304 stainless steel, pressure balanced | **Max. pressure:** 16 bar | **Temperature:** -5°C to 120°C | **Leakage:** 0.03% Kvs | **Stroke:** 8.5 mm | **Motorized by:** MVC.03 and MVC503R

Model	DN	Kvs	Max. differential pressure [bar]
			MVC
2TGA20BT	3/4"	5	10
2TGA25BT	1"	10	
2TGA32BT	1 ¼"	13	
2TGA40BT	1 ½"	18	
2TGA50BT	2"	30	

VSBP.M PN16 Valve with Tight Close-off

Body: GJL-250 cast iron | **Plug:** NBR | **Max. pressure:** 16 bar | **Temperature:** -5°C to 95°C | **Leakage:** tight close-off | **Stroke:** 16.5 mm | **Motorized by:** MVB

Model	DN	Kvs	Max. differential pressure [bar]
			MVB
VSBP3M	3/4"	6.3	8.8
VSBP4M	1"	10	5.5
VSBP5M	1 ¼"	16	3.5
VSBP6M	1 ½"	25	2.5
VSBP8M	2"	36	1.8

In order to avoid seat & plug wearing issues, we recommend not to exceed 2 bar differential pressure.

VSB-VMB valves with male threaded connections "PS150"

2TBB PN16 Bronze Valve

Body: CC491K bronze | **Plug:** CW617N brass | **Max. pressure:** 16 bar | **Temperature:** -10°C[1] to 150°C[2] | **Leakage:** tight close-off (1/2"-3/4"), 0.1% (> 3/4") | **Stroke:** 9.5 mm (1/2"-3/4"), 16 mm (> 3/4") | **Motorized by:** MVE and MVH

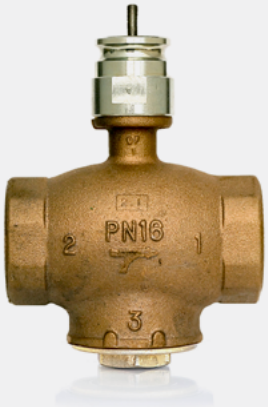

Model	DN	Kvs	Max. differential pressure [bar]				
			MVE.06(R)	MVE.10 (R)	MVE.15 (R)	MVE.22	MVH56EA/C
2TBB15R1	1/2"	0.2	16	16	16	16	16
2TBB15R2	1/2"	0.5	16	16	16	16	16
2TBB15R3	1/2"	1	16	16	16	16	16
2TBB15	1/2"	2.5	16	16	16	16	16
2TBB20	3/4"	4	16	16	16	16	16
2TBB25	1"	8	11.3	16	16	16	13.2
2TBB32	1 ¼"	12	7.1	12.2	16	16	8.4
2TBB40	1 ½"	21	4.9	8.4	12.8	16	5.7
2TBB50	2"	33	2.7	4.6	7.1	10.2	3.2

1) For applications with negative temperature fluid, use the stem heater, 244 or 248.
2) Please check our DBL244en datasheet for pressure rating for fluid temperature higher than 120°C.

2TBB.T PN16 Bronze Valve

Body: CC491K bronze | **Plug:** CW617N brass | **Max. pressure:** 16 bar | **Temperature:** 2°C to 150°C | **Leakage:** tight close-off (1/2"-3/4"), 0.1% Kvs (> 3/4") | **Stroke:** 12 mm | **Motorized by:** MVC.03 and MVC503R

Model	DN	Kvs	Max. differential pressure [bar]
			MVC
2TBB15T	1/2"	2.5	14.3
2TBB20T	3/4"	4	9.9
2TBB25T	1"	8	5.4
2TBB32T	1 ¼"	12	3.4
2TBB40T	1 ½"	21	2.3
2TBB50T	2"	33	1.2

2TIA PN16 Stainless Steel Valve

Body: AISI304 stainless steel | **Plug:** AISI304 stainless steel | **Max. pressure:** 16 bar | **Temperature:** -25°C[1] to 150°C | **Leakage:** tight close-off | **Stroke:** 20 mm | **Motorized by:** MVE

2TIA valves are totally lead free, ideal for applications, where fluids other than water-glycol mixture are used such as demineralized water, drinkable water, aggressive fluids, and more.

Model	DN	Kvs	Max. differential pressure [bar]					
			MVE.04(R)	MVE.06(R)	MVE.10(R)	MVE.15(R)	MVE.22	MVH56EA MVH56EC
2TIA20L	3/4"	6.3	10.9	16	16	16	16	16
2TIA25L	1"	10	7	10.5	16	16	16	12.8
2TIA32L	1 ¼"	16	4.6	7.2	12.1	16	16	8.4
2TIA40L	1 ½"	25	3.4	5.3	9	13.7	16	6.2
2TIA50L	2"	40	2	3.2	5.5	8.4	12.5	3.8
2TIA65L	2 ½"	63	6.3	1.8	3.1	4.8	7.1	2.1

1) For applications with negative temperature fluid, use the stem heater, 244 or 248.

3TGB.B and 3TGB.F PN16 Threaded Valve

Body: GJL-250 cast iron | **Plug:** CW617N brass | **Max. pressure:** 16 bar | **Temperature:** -5°C[1)] to 140°C | **Leakage:** 0 to 0.001% Kvs | **Stroke:** 11.5 mm | **Motorized by:** MVC, MVB and MVE.S

Model	DN	Kvs	Max. differential pressure [bar]			Other features
			MVC	MVB	MVE.S	
3TGB15BR2	1/2"	1.6	11.6	13.7	-	• Equal-percentage control flow characteristic • With MVB max 120°C (140°C with MVB+MVBHT) • For MVT203, MVT403, MVT503 using AG74-03 adapter
3TGB15BR3	1/2"	2.5				
3TGB15B	1/2"	4				
3TGB15FR2	1/2"	1.6	-	-	16	
3TGB15FR3	1/2"	2.5				
3TGB15F	1/2"	4				

Close-off and Kvs values refer to the direct way, for angle way values see the datasheet.
In order to avoid seat & plug wearing issues, we recommend not to exceed 4 bar differential pressure.
1) For applications with negative temperature fluid, use the stem heater, 244 or 248.

VMB (Threaded) and VMB.F (Flanged) PN16 Valve

Body: GJL-250 cast iron | **Plug:** CW614N brass | **Max. pressure:** 16 bar | **Temperature:** -10°C[1)] to 150°C | **Leakage:** 0.03% Kvs | **Stroke:** 16.5 mm (18.5 mm max.) | **Motorized by:** MVB, MVE and MVH

Model	DN	Kvs	Max. differential pressure [bar]							Other features
			MVB	MVE.06(R)	MVE.10 (R)	MVE.15 (R)	MVE.22	MVH	MVH56EA MVH56EC	
VMB3	3/4"	6.3	10.8	16	16	16	16	16	16	• With MVB max 120°C, with MVB+MVBHT max 140°C) • Control characteristic: equal-percentage on direct way, linear on angle way • For MVE actuator, add AG52 linkage • For MVH actuator, add AG62 linkage • For MVE.S actuator, add AG63 linkage
VMB4	1"	10	6.8	11.9	16	16	16	16	13.8	
VMB5	1 ¼"	16	4.1	7.2	12.1	16	16	16	8.4	
VMB6	1 ½"	22	2.9	5	8.6	13	16	11.7	5.9	
VMB8	2"	30	2.1	3.7	6.4	9.6	14.3	8.7	4.4	
VMB8A	2"	40	2.1	3.7	6.4	9.6	14.3	8.7	4.4	
VMB3F	20	6.3	10.8	16	16	16	16	16	16	As above with PN16 slip-on flanges
VMB4F	25	10	6.8	11.9	16	16	16	16	13.8	
VMB5F	32	16	4.1	7.2	12.1	16	16	16	8.4	
VMB6F	40	22	2.9	5	8.6	13	16	11.7	5.9	
VMB8F	50	30	2.1	3.7	6.4	9.6	14.3	8.7	4.4	
VMB8AF	50	40	2.1	3.7	6.4	9.6	14.3	8.7	4.4	

Close-off and Kvs values refer to the direct way, for angle way values see the datasheet.
In order to avoid seat & plug wearing issues, we recommend not to exceed 2 bar differential pressure.
1) For applications with negative temperature fluid, use the stem heater, 244 or 248.

VMBP.M PN16 Modulating Thereaded and Tight Close-off Valve

Body: GJL-250 cast iron | **Plug:** NBR | **Max. pressure:** 16 bar | **Temperature:** -5°C to 95°C | **Leakage:** tight close-off | **Stroke:** 16.5 mm | **Motorized by:** MVB

Model	DN	Kvs	Max. differential pressure [bar]
			MVB
VMBP3M	3/4"	6.3	8.8
VMBP4M	1"	10	5.5
VMBP5M	1 ¼"	16	3.5
VMBP6M	1 ½"	25	2.5
VMBP8M	2"	36	1.8

TIGHT CLOSE-OFF

Close-off and Kvs values refer to the direct way, for angle way values see the datasheet.
In order to avoid seat & plug wearing issues, we recommend not to exceed 2 bar differential pressure.

3-way Globe Valves - Threaded Connections

VMB.T PN16 Valve

Body: GJL-250 cast iron | **Plug:** CW617N brass | **Max. pressure:** 16 bar | **Temperature:** 5°C to 95°C | **Leakage:** direct way <0.03% Kvs | **Stroke:** 5.5 mm | **Motorized by:** MVC.03 and MVC503R

Model	DN	Kvs	Max. differential pressure [bar]	Other features
			MVC	
VMB3T	3/4"	6.3	9	• Linear control characteristic
VMB4T	1"	10	5.5	
VMB5T	1 ¼"	14	3.5	
VMB6T	1 ½"	18	2.5	
VMB8T	2"	25	1.9	

Close-off and Kvs values refer to the direct way, for angle way values see the datasheet.
Old VMBT3, VMBT4, VMBT5, VMBT6, (motorized by MVT44, MVT28, MVT56, MVT57 actuators) still available as spare parts.

3TBB PN16 Bronze Valve

Body: CB491K bronze | **Plug:** CW617N brass | **Max. pressure:** 16 bar | **Temperature:** -10°C[1] to 150°C[2] | **Leakage:** tight close-off (1/2"-3/4"), 0.1% (> 3/4") | **Stroke:** 9.5 mm (1/2"-3/4"), 16 mm (> 3/4") | **Motorized by:** MVH and MVE

Model	DN	Kvs	Max. differential pressure [bar]				
			MVE.06(R)	MVE.10 (R)	MVE.15 (R)	MVE.22	MVH56EA MVH56EC
3TBB15	1/2"	2	16	16	16	16	16
3TBB20	3/4"	5	16	16	16	16	16
3TBB25	1"	10	11.3	16	16	16	13.2
3TBB32	1 ¼"	16	7.1	12.2	16	16	8.4
3TBB40	1 ½"	25	4.9	8.4	12.8	16	5.7
3TBB50	2"	38	2.7	4.6	7.1	10.6	3.2

Close-off and Kvs values refer to the direct way, for angle way values see the datasheet.
1) For applications with negative temperature fluid, use the stem heater, 244 or 248.
2) Please check our DBL244en datasheet for pressure rating for fluid temperature higher than 120°C

3TBB.T PN16 Bronze Valve

Body: CC491K bronze | **Plug:** CW617N brass | **Max. pressure:** 16 bar | **Temperature:** 2°C to 150°C | **Leakage:** tight close-off (1/2"-3/4"), 0.1% Kvs (> 3/4") | **Stroke:** 12 mm | **Motorized by:** MVC.03 and MVC503R

Model	DN	Kvs	Max. differential pressure [bar]
			MVC
3TBB15T	1/2"	2	14.3
3TBB20T	3/4"	5	9.9
3TBB25T	1"	10	5.4
3TBB32T	1 ¼"	16	3.4
3TBB40T	1 ½"	25	2.3
3TBB50T	2"	38	1.2

Close-off and Kvs values refer to the direct way, for angle way values see the datasheet.

3TIA PN16 Stainless Steel Valve

Body: AISI304 stainless steel | **Plug:** AISI304 stainless steel | **Max. pressure:** 16 bar | **Temperature:** -25°C[1] to 150°C | **Leakage:** tight close-off | **Stroke:** 20 mm | **Motorized by:** MVE

3TIA valves are totally lead free. ideal for applications. where fluids other than water-glycol mixture are used such as demineralized water. drinkable water. aggressive fluids. and more.

Model	DN	Kvs	Max. differential pressure [bar]					
			MVE.04(R)	MVE.06 (R)	MVE.10 (R)	MVE.15 (R)	MVE.22	MVH56EA MVH56EC
3TIA20	3/4"	7.3	10.9	16	16	16	16	16
3TIA25	1"	11.6	7	10.5	16	16	16	12.8
3TIA32	1 ¼"	18.5	4.6	7.2	12.1	16	16	8.4
3TIA40	1 ½"	28.9	3.4	5.3	9	13.7	16	6.2
3TIA50	2"	46.2	2	3.2	5.5	8.4	12.5	3.8
3TIA65	2 ½"	72.8	1.1	1.8	3.1	4.8	7.1	2.1

Close-off and Kvs values refer to the direct way, for angle way values see the datasheet.
1) For applications with negative temperature fluid. use the stem heater 248.

Fittings for Threaded Valves

Model	Valve side (A)	Pipe side (B) parallel	Valves
89811-02	G 1/2" F	G 3/8" M	For brass valves from 1/2" to 1 ½" (e.g., iSMA CONTROLLI VSX, VMX, VTX, VSX.T, VMX.T, VTX.T, VLX, VLX.P valves)
89811-03	G 3/4" F	G 1/2" M	
89811-01	G 1" F	G 3/4" M	
89811-04	G 1 ¼" F	G 1" M	
89811-05	G 1 ½" F	G 1 ¼" M	

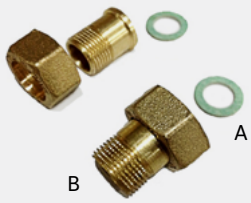

Model	Valve side (B)	Pipe side (A)	Valves
89948-01	G 1/2" M	G 1/2" F	For cast iron valves up to 2" (e.g., iSMA CONTROLLI VSB-VMB, VSB.T-VMB.T, 2TGB15, 3TGB15, 2TGA.B valves)
89948-02	G 3/4" M	G 3/4" F	
89948-03	G 1" M	G 1" F	
89948-04	G 1 ¼" M	G 1 ¼" F	
89948-05	G 1 ½" M	G 1 ½" F	
89948-06	G 2" M	G 2" F	

Model	Valve side (A)	Pipe side (B) tapered	Pack quantity	Valves
55183-11	G 1/2" F	R 3/8"	10	For fibre reinforced polymer valves (Piuma series)
55183-12	G 3/4" F	R 1/2"		

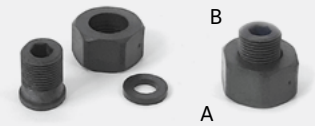

Flanged Globe Valves Selection Chart

X F X X XX X

2 = 2-way
3 = 3-way

F = flanged connections
T = threaded connections

A = steel PN40
G = cast iron PN16
I = stainless steel PN16, PN40
S = spheroidal cast iron PN25

BODY

A= stainless steel
B= brass

PLUG

15-200 = DN according to the model

VARIANTS

B = balanced plug
P= extended neck for high temp.
Rx = reduced diameter (x=Kvs)
S = bellows seal for high temp.
T = extended neck and low temp.
L = low leak rate (0.01% of the Kvs)

PS73 = 2FGB / 3FGB with stainless-steel plug
PS89 = 2FGB / 3FGB with grooved connections suitable to Victaulic clamps

2FGB and 2FGB.L PN16 Valve

Body: GJL-250 cast iron | **Plug:** CW617N brass (DN25-DN100), CB491K bronze (DN125-DN150) | **Max. pressure:** 16 bar | **Temperature:** -10°C[1] to 150°C | **Leakage:** 0.03% Kvs (2-3FGB), tight close-off (2-3FGB .L) | **Stroke:** 16.5 mm (DN25), 25 mm (DN40 to DN65), 45 mm (DN80 to DN150) | **Motorized by:** MVE and MVH

Model	DN	Kvs	Max. differential pressure [bar]							Other features
			MVE.06(R)	MVE.10(R)	MVE.15(R)	MVE.22	MVH	MVHE3K	MVH56EA MVH56EC	
2FGB25R4	25R4	4	9.4	15.9	16	16	16	16	11	• Control flow characteristics equal-percentage
2FGB25R7	25R7	6.3	9.4	15.9	16	16	16	16	11	
2FGB25	25	10	9.4	15.9	16	16	16	16	11	
2FGB32	32	19	5	8.6	13	16	11.7	16	5.9	
2FGB40R19	40R19	19	5	8.6	13	16	11.7	16	5.9	
2FGB40	40	25	5	8.6	13	16	11.7	16	5.9	
2FGB50	50	40	3.1	5.3	8.1	12	7.3	16	3.6	
2FGB65	65	63	1.8	3.1	4.8	7.1	4.3	9.6	2.1	
2FGB80	80	100	1.1	2	3.1	4.6	2.8	6.2	1.3	
2FGB100	100	130	0.7	1.2	1.9	2.9	1.7	3.9	0.8	
2FGB125	125	200	0.4	0.7	1.2	1.8	1	2.4	0.5	
2FGB150	150	300	0.3	0.5	0.8	1.2	0.7	1.6	0.3	
2FGB65L	65	63	1.8	3.1	4.8	7.1	4.3	9.6	2.1	• Control flow characteristics equal-percentage
2FGB80L	80	100	1.1	2	3.1	4.6	2.8	6.2	1.3	
2FGB100L	100	130	0.7	1.2	1.9	2.9	1.7	3.9	0.8	
2FGB125L	125	200	0.4	0.7	1.2	1.8	1	2.4	0.5	
2FGB150L	150	300	0.3	0.5	0.8	1.2	0.7	1.6	0.3	

In order to avoid seat & plug wearing issues, we recommend not to exceed 2 bar (2FGB) & 6 bar (2FGA) differential pressure.
1) For applications with negative temperature fluid, use the stem heater 248.

2FGA PN16 Valve

Body: GJL-250 cast iron | **Plug:** AISI304 stainless steel | **Max. pressure:** 16 bar | **Temperature:** -10°C[1] to 200°C | **Leakage:** 0.02% Kvs | **Stroke:** 16.5 mm (DN25), 25 mm (DN40 to DN65), 45 mm (DN80 to DN150) | **Motorized by:** MVE and MVH

Model	DN	Kvs	Max. differential pressure [bar]							Other features
			MVE.06(R)	MVE.10(R)	MVE.15(R)	MVE.22	MVH	MVHE3K	MVH56EA MVH56EC	
2FGA15R0	15R0	0.6	16	16	16	16	16	16	16	• Control flow characteristics equal-percentage
2FGA15R1	15R1	1	16	16	16	16	16	16	16	
2FGA15R2	15R2	1.6	16	16	16	16	16	16	16	
2FGA15R3	15R3	2.5	16	16	16	16	16	16	16	
2FGA15	15	4	16	16	16	16	16	16	16	
2FGA20	20	6.3	12.5	16	16	16	16	16	15.1	
2FGA25	25	10	7.6	14.1	16	16	16	16	9.2	
2FGA32	32	16	7.6	14.1	16	16	16	16	9.2	
2FGA40	40	24	5.1	9.5	15	16	13.4	16	6.2	
2FGA50	50	32	3.3	6.2	9.8	14.8	8.7	16	4	
2FGA65	65	63	1.3	2.5	4	6.1	3.5	8.3	1.6	
2FGA80	80	110	0.8	1.6	2.6	4	2.3	5.5	1	
2FGA100	100	140	0.5	1	1.6	2.5	1.4	3.5	0.6	

In order to avoid seat & plug wearing issues, we recommend not to exceed 2 bar (2FGB) & 6 bar (2FGA) differential pressure.
1) For applications with negative temperature fluid, use the stem heater 248.

2FSA PN25 Flanged Valve

Body: GJS-400 spheroidal cast iron | **Plug:** AISI304 stainless steel | **Max. pressure:** 25 bar | **Temperature:** -10°C[1)] to 230°C | **Leakage:** 0.02% Kvs | **Stroke:** 16.5 mm (DN25), 25 mm (DN40 to DN65) | **Motorized by:** MVE and MVH

Model	DN	Kvs	Max. differential pressure [bar]							Other features
			MVE.06(R)	MVE.10 (R)	MVE.15 (R)	MVE.22	MVH	MVHE3K	MVH56EA MVH56EC	
2FSA25R4	25R4	4	18.5	25	25	25	25	25	21.5	• Equal-percentage control flow characteristic
2FSA25R7	25R7	6.3	9.3	15.8	23.9	25	21.5	25	10.8	
2FSA25	25	10	9.3	15.8	23.9	25	21.5	25	10.8	
2FSA32	32	16	6.2	10.6	16.1	23.9	14.5	25	7.3	
2FSA40	40	25	4.4	7.6	11.6	17.2	10.4	23.1	5.2	
2FSA50	50	40	2.8	4.8	7.4	10.9	6.6	14.7	3.3	
2FSA65	65	63	1.6	2.8	4.3	6.4	3.9	8.6	1.9	

In order to avoid seat & plug wearing issues, we recommend not to exceed 8 bar differential pressure.

2FAA and 2FAA.P PN40 Flanged Valve

Body: ASTM A216 WCB steel | **Plug:** AISI304 stainless steel | **Max. pressure:** 40 bar | **Temperature:** -10°C[1)] to 230°C (2FAA), -20°C[1)] to 350°C (2FAA.P) | **Leakage:** 0.02% Kvs | **Stroke:** 16.5 mm (DN25), 25 mm (DN40 to DN65) | **Motorized by:** MVE and MVH

Model	DN	Kvs	Max. differential pressure [bar]							Other features
			MVE.06(R)	MVE.10 (R)	MVE.15 (R)	MVE.22	MVH	MVHE3K	MVH56EA MVH56EC	
2FAA15R2	15R2	1.6	30	30	30	40	30	30	30	• Equal-percentage control flow characteristic
2FAA15	15	4	14.5	32.1	40	40	30	30	18.7	
2FAA20	20	6.3	8.5	19	32.2	40	28.4	30	11.1	
2FAA25	25	10	5.1	11.6	19.8	31.1	17.4	30	6.7	
2FAA32	32	16	5.1	11.6	19.8	31.1	17.4	30	6.7	
2FAA40	40	24	3.4	7.8	13.3	21	11.7	29.2	4.5	
2FAA50	50	32	2.2	5.1	8.7	13.7	7.6	19.1	2.9	
2FAA65	65	63	0.8	2	3.5	5.6	3.1	7.9	1.1	
2FAA80	80	110	0.5	1.3	2.3	3.7	2	5.2	0.7	
2FAA15PR2	15R2	1.6	30	30	40	40	30	30	30	• Greaser and special gaskets for high temperatures • Equal-percentage control flow characteristic
2FAA15P	15	4	14.5	32.1	40	40	30	30	18.7	
2FAA20P	20	6.3	8.5	19	32.2	40	28.4	30	11.1	
2FAA25P	25	10	5.1	11.6	19.8	31.1	17.4	30	6.7	
2FAA32P	32	16	5.1	11.6	19.8	31.1	17.4	30	6.7	
2FAA40P	40	24	3.4	7.8	13.3	21	11.7	29.2	4.5	
2FAA50P	50	32	2.2	5.1	8.7	13.7	7.6	19.1	2.9	
2FAA65P	65	63	0.8	2	3.5	5.6	3.1	7.9	1.1	
2FAA80P	80	110	0.5	1.3	2.3	3.7	2	5.2	0.7	

In order to avoid seat & plug wearing issues, we recommend not to exceed 8 bar (2FAA) & 12 bar (2FAA.P) differential pressure.
1) For fluid applications with temperature below -10°C, when ordering, add "T" instead of "P" to model, e.g., 2FAA40T.

2F.B PN16-PN25-PN40 Balanced Plug Valves

Stroke: 16.5 mm (DN25), 25 mm (DN40 to DN65), 45 mm (DN80 to DN150) | **Motorized by:** MVE and MVH

Model	DN	Kvs	Max. differential pressure [bar]						Other features
			MVE.06(R)	MVE.10(R)	MVE.15(R)	MVE.22	MVH	MVH56EA MVH56EC	
2FGB65B	65	63	10.8	16	16	16	16	14	• Body: GJL-250 cast iron • Plug: DN65-100 brass, DN125-150 bronze • PN16 flanged connections • Fluid temperature: -10°C[1] to 150°C • Equal-percentage control characteristic • Leakage 0.03% Kvs
2FGB80B	80	100	8	16	16	16	16	10.6	
2FGB100B	100	130	5.3	13.9	16	16	16	7.4	
2FGB125B	125	200	3.5	10.4	16	16	16	5.1	
2FGB150B	150	300	2.1	7.8	15	16	12.9	3.5	
2FSA25BR4	25R4	4	25	25	25	25	25	25	• Body: GJS-400 spheroidal cast iron Plug: AISI304 stainless steel • PN25 flanged connections • Fluid temperature: -10°C[1] to 230°C • Equal-percentage control characteristic • Leakage 0.02% Kvs
2FSA25BR7	25R7	6.3	25	25	25	25	25	25	
2FSA25B	25	10	25	25	25	25	25	25	
2FSA32B	32	16	25	25	25	25	25	25	
2FSA40B	40	25	24.9	25	25	25	25	25	
2FSA50B	50	40	18.3	25	25	25	25	25	
2FSA65B	65	63	12.2	25	25	25	25	17.6	
2FSA80B	80	100	8.3	25	25	25	25	12.8	
2FAA25B	25	10	30	30	30	40	30	30	• Body: ASTM A216 WCB steel • Plug: AISI304 stainless steel • PN40 flanged connections • Fluid temperature: -20°C[1] to 230°C • Equal-percentage control characteristic • Leakage 0.02% Kvs
2FAA32B	32	16	30	30	30	40	30	30	
2FAA40B	40	25	27.6	30	30	40	30	30	
2FAA50B	50	40	21	30	30	40	30	28.1	
2FAA65B	65	63	14.9	30	30	40	30	20.4	
2FAA80B	80	100	11	29.6	30	40	30	15.5	
2FAA100B	100	160	6.5	19.1	30	34.9	30	9.5	
2FAA125B	125	200	4.2	14.3	27.6	27	23.3	6.6	

In order to avoid seat & plug wearing issues, we recommend not to exceed 2 bar (2FGBB) & 8 bar (2FSA) & 12 bar (2FAAB) differential pressure.

1) For applications with negative temperature fluid, use the stem heater 248.

2FGA.B and 2FAA.B Double Seat Valves

Stroke: 45 mm | **Motorized by:** MVE and MVH

Model	DN	Kvs	Max. differential pressure [bar]					Other features
			MVE.10(R)	MVE.15(R)	MVE.22	MVH	MVH56EA MVH56EC	
2FAA150B (PN25)	150	300	9.5	20.3	25	17.1	2.9	• Fe 52 Steel body and stainless steel internal parts • PN25 flanged connections • Fluid temperature: -10°C[1] to 230°C • Equal-percentage control characteristic • Leakage 0.12% Kvs
2FGA200B (PN16)	200	500	12	16	16	16	3.7	• G25 cast iron body, stainless steel internal parts • PN16 flanged connections • Fluid temperature: -10°C[1] to 200°C • Equal-percentage control characteristic • Leakage 0.02% Kvs

1) For applications with negative temperature fluid, use the stem heater 248.

2FIA PN16-PN40 Stainless Steel Flanged Valve

Body: AISI316 stainless steel | **Plug:** AISI316L stainless steel | **Max. pressure:** 16 bar (DN65, DN100), 40 bar (DN25, DN32, DN40, DN50, DN80) | **Temperature:** -30°C to 180°C (low temperature extension -60°C) | **Leakage:** 0.02% Kvs | **Stroke:** 16.5 mm (DN25), 25 mm (DN40 to DN65) | **Motorized by:** MVH and MVE (assembled on the valve in our factory, please include MVHAV or "MVEAV-10" code)

Model	DN	Kvs	Stroke [mm]	Max. differential pressure [bar]						
				MVE.06(R)	MVE.10(R)	MVE.15(R)	MVE.22	MVH	MVHE3K	MVH56EA MVH56EC
2FIA25R4	25	3.5	20	27	-	-	-	-	-	31
2FIA25	25	10		10	-	-	-	-	-	11.5
2FIA32	32	16		5.7	-	-	-	-	-	6.7
2FIA40	40	24		4	6.7	10	-	10	-	4.7
2FIA50	50	42		2.3	3.9	5.8	8.5	5.8	11.7	2.7
2FIA65	65	63	30	-	2.4	3.6	5.3	3.6	7.2	-
2FIA80	80	91		-	-	-	4.3	-	5.8	-
2FIA100	100	138	35	-	-	-	2.4	-	3.2	-

3FGB and 3FGB.L PN16 Flanged Valve

Body: GJL-250 cast iron | **Plug:** CW617N brass (DN25 to DN100), CB491K bronze (DN125 to DN150) | **Max. pressure:** 16 bar | **Temperature:** -10°C[1] to 150°C | **Stroke:** 16.5 mm (DN25), 25 mm (DN40 to DN65), 45 mm (DN80 to DN150) | **Motorized by:** MVE and MVH

Model	DN	Kvs	Max. differential pressure [bar]							Other features
			MVE.06(R)	MVE.10(R)	MVE.15(R)	MVE.22	MVH	MVHE3K	MVH56EA MVH56EC	
3FGB25R4	25R4	4	9.4	15.9	16	16	16	16	11	• Control flow characteristic direct way: equal-percentage, angle way: linear • Leakage: direct-way 0.03% Kvs, angle way 2% Kvs
3FGB25R7	25R7	6.3	9.4	15.9	16	16	16	16	11	
3FGB25	25	10	9.4	15.9	16	16	16	16	11	
3FGB32	32	19	5	8.6	13	16	11.7	16	5.9	
3FGB40R19	40R19	19	5	8.6	13	16	11.7	16	5.9	
3FGB40	40	25	5	8.6	13	16	11.7	16	5.9	
3FGB50	50	40	3.1	5.3	8.1	12	7.3	16	3.6	
3FGB65	65	63	1.8	3.1	4.8	7.1	4.3	9.6	2.1	
3FGB80	80	100	1.1	2	3.1	4.6	2.8	6.2	1.3	
3FGB100	100	130	0.7	1.2	1.9	2.9	1.7	3.9	0.8	
3FGB125	125	200	0.4	0.7	1.2	1.8	1	2.4	0.5	
3FGB150	150	300	0.3	0.5	0.8	1.2	0.7	1.6	0.3	
3FGB65L	65	63	1.8	3.1	4.8	7.1	4.3	9.6	2.1	• Control flow characteristic direct way: equal-percentage, angle way: linear • Tight close-off Leakage = 0.00%
3FGB80L	80	100	1.1	2	3.1	4.6	2.8	6.2	1.3	
3FGB100L	100	130	0.7	1.2	1.9	2.9	1.7	3.9	0.8	
3FGB125L	125	200	0.4	0.7	1.2	1.8	1	2.4	0.5	
3FGB150L	150	300	0.3	0.5	0.8	1.2	0.7	1.6	0.3	

Close-off and Kvs values refer to the direct way, for angle way values see the datasheet.
In order to avoid seat & plug wearing issues, we recommend not to exceed 2 bar differential pressure.
1) For applications with negative temperature fluid, use the stem heater 248.

3FSA and 3FSA.S PN25 Flanged Valve

Body: GJS-400 spheroidal cast iron | **Plug:** AISI304 stainless steel | **Max. pressure:** 25 bar | **Leakage:** 0.02% Kvs | **Stroke:** 16.5 mm (DN25), 25 mm (DN40 to DN65), 45 mm (DN80 to DN150) | **Motorized by:** MVE and MVH

Model	DN	Kvs	Max. differential pressure [bar]							Other features
			MVE.06(R)	MVE.10(R)	MVE.15(R)	MVE.22	MVH	MVHE3K	MVH56EA MVH56EC	
3FSA25R4	25R4	4	18.5	25	25	25	25	25	21.5	• Fluid temperature: -10°C[1] to 230°C • Control flow characteristic: equalpercentage (DN25 to DN65), linear (DN80) angle way: linear
3FSA25R7	25R7	6.3	9.3	15.8	23.9	25	21.5	25	10.8	
3FSA25	25	10	9.3	15.8	23.9	25	21.5	25	10.8	
3FSA32	32	19	6.2	10.6	16.1	23.9	14.5	25	7.3	
3FSA40	40	25	4.4	7.6	11.6	17.2	10.4	23.1	5.2	
3FSA50	50	40	2.8	4.8	7.4	10.9	6.6	14.7	3.3	
3FSA65	65	63	1.6	2.8	4.3	6.4	3.9	8.6	1.9	
3FSA80	80	100	1	1.8	2.8	4.2	2.5	5	1.2	
3FSA25SR4	25R4	4	5	5	5	5	5	5	5	• Fluid temperature: -10°C[1] to 300°C • Control flow characteristic: equal percentage (DN25 to 65), linear (DN80) angle way: linear
3FSA25SR7	25R7	6.3	5	5	5	5	5	5	5	
3FSA25S	25	10	5	5	5	5	5	5	5	
3FSA32S	32	16	5	5	5	5	5	5	5	
3FSA40S	40	25	4.4	5	5	5	5	5	5	
3FSA50S	50	40	2.8	4.8	5	5	5	5	3.3	
3FSA65S	65	63	1.6	2.8	4	5	3.9	5	1.9	
3FSA80S	80	100	1	1.8	2.6	4.2	2.5	5	1.2	

Close-off and Kvs values refer to the direct way, for angle way values see the datasheet.
In order to avoid seat & plug wearing issues, we recommend not to exceed 8 bar differential pressure.
1) For applications with negative temperature fluid, use the stem heater 248.

3FAA and 3FAA.P PN40 Flanged Valve

Body: ASTM A216 WCB steel | **Plug:** AISI304 stainless steel | **Max. pressure:** 40 bar | **Leakage:** 0.02% Kvs | **Stroke:** 16.5 mm (DN25), 25 mm (DN32 to DN65), 45 mm (DN80 to DN125) | **Motorized by:** MVE and MVH

Model	DN	Kvs	Max. differential pressure [bar]							Other features
			MVE.06(R)	MVE.10(R)	MVE.15(R)	MVE.22	MVH	MVHE3K	MVH56EA MVH56EC	
3FAA25R4	25R4	4	9.3	15.8	23.9	35.3	21.5	30	10.8	• Fluid temperature: -10°C[1] to 230°C • Control flow characteristic: linear
3FAA25R7	25R7	6.3	9.3	15.8	23.9	35.3	21.5	30	10.8	
3FAA25	25	10	9.3	15.8	23.9	35.3	21.5	30	10.8	
3FAA32	32	16	6.2	10.6	16.1	23.9	14.5	30	7.3	
3FAA40	40	25	4	6.9	10.5	15.6	9.4	20.9	4.7	
3FAA50	50	40	2.8	4.8	7.4	10.9	6.6	14.7	3.3	
3FAA65	65	63	1.6	2.8	4.3	6.4	3.9	8.6	1.9	
3FAA80	80	100	1	1.8	2.8	4.2	2.5	5.7	1.2	
3FAA100	100	140	0.6	1.1	1.7	2.6	1.6	3.6	0.7	
3FAA125	125	250	0.3	0.7	1.1	1.7	1	2.3	0.4	
3FAA25PR4	25R4	4	9.3	15.8	23.9	35.3	19.2	30	10.8	• Fluid temperature: -25°C[1] to 350°C • Control flow characteristics: linear
3FAA25PR7	25R7	6.3	9.3	15.8	23.9	35.3	19.2	30	10.8	
3FAA25P	25	10	9.3	15.8	23.9	35.3	19.2	30	10.8	
3FAA32P	32	16	6.2	10.6	16.1	23.9	12.1	30	7.3	
3FAA40P	40	25	4	6.9	10.5	15.6	7.9	20.9	4.7	
3FAA50P	50	40	2.8	4.8	7.4	10.9	5.6	14.7	3.3	
3FAA65P	65	63	1.6	2.8	4.3	6.4	3.3	8.6	1.9	
3FAA80P	80	100	1	1.8	2.8	4.2	2.1	5.7	1.2	
3FAA100P	100	140	0.6	1.1	1.7	2.6	1.4	3.6	0.7	
3FAA125P	125	250	0.3	0.7	1.1	1.7	0.8	2.3	0.4	

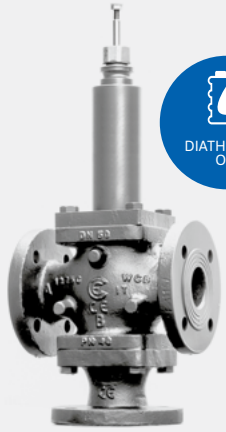

DIATHERMIC OIL

Close-off and Kvs values refer to the direct way, for angle way values see the datasheet.
In order to avoid seat & plug wearing issues, we recommend not to exceed 12 bar differential pressure.
1) For applications with fluids -10°C/-20°C, when ordering, replace letter "P" with letter "T" in the part-number, e.g, 3FAA40T
For applications with fluids -20°C/-25°C, when ordering, replace letter "P" with letters "TPS132" in the part-number, e.g., 3FAA40TPS132

MORE OPTIONS

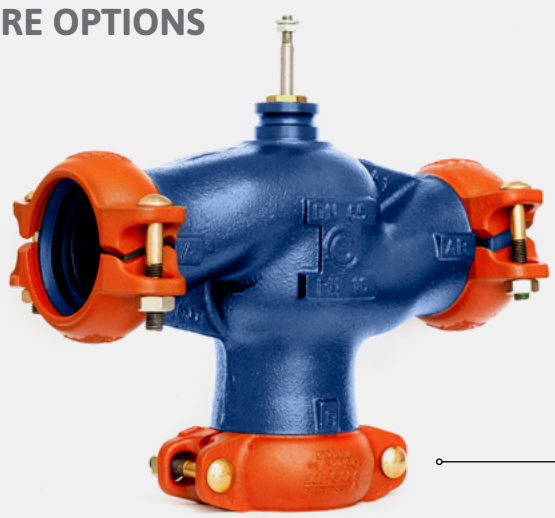

3FGB Valves with Stainless Steel Plug
3FGB valves are also available with stainless steel plug and stainless steel stem packing, both AISI 304. Just add PS73 at the end of the part number, for example: 3FGB65PS73

"PS89"
2FGB - 3FGB valves with grooved connections suitable to Victauilic clamps
For example: 3FGB65PS89

3FIA PN16-PN40 Stainless Steel Flanged Valve

Body: AISI316 stainless steel | **Plug:** AISI316L stainless steel | **Max. pressure:** 16 bar (DN65, DN100), 40 bar (DN25, DN32, DN40, DN50, DN80) | **Temperature:** -30°C to 180°C (low temperature extension -60°C) | **Leakage:** 0.02% Kvs | **Motorized by:** MVH and MVE (assembled on the valve in our factory, please include "MVHAV" or "MVEAV-10" code) | Linear flow characteristic, V-port plug

Model	DN	Kvs	Stroke [mm]	Max. differential pressure [bar]						
				MVE.06(R)	MVE.10(R)	MVE.15(R)	MVE.22	MVH	MVHE3K	MVH56EA MVH56EC
3FIA25R4	25	3,5	20	27	-	-	-	-	-	31
3FIA25	25	10		10	-	-	-	-	-	11.5
3FIA32	32	16		5.7	-	-	-	-	-	6.7
3FIA40	40	24		4	6.7	10	-	10	-	4.7
3FIA50	50	42		2.3	3.9	5.8	8.5	5.8	11.7	2.7
3FIA65	65	63	30	-	2.4	3.6	5.3	3.6	7.2	-
3FIA80	80	91		-	-	-	4.3	-	5.8	-
3FIA100	100	138		-	-	-	2.4	-	3.2	-

Close-off and Kvs values refer to the direct way, for angle way values see the datasheet.

MVX for Zone Valves

Electro-thermal actuator for V.X valves with Kvs from 0.25 to 6 - Stroke with end indicator - 65 cm bipolar/tripolar cable - M30x1,5 connection[1)]

Model	Power supply	Force [N]	Control signal	Stroke [mm]	IP	Consumption		Starting time [s]
						Starting	Operation	
MVX22R	110-230 V AC	140	On-off	4	44	12-50 VA	1.8 VA	90
MVX42R	24 V AC/DC	140	On-off, PWM	4	44	4 VA	1.8 VA	90
MVX52	24 V AC	140	Proportional 0-10 V DC	2.5	44	5 VA	1.8 VA	90

When power is off: actuator spindle is completely inside.
When power is on and control signal is 0 V DC: actuator spindle is completely out (bottom position if mounting is vertical).
When power is on and control signal is 10 V DC: actuator spindle is completely inside (top position if mounting is vertical).
1) M28x1,5 is available as a variant by adding PS107 at the end of the actuator part number (e.g., MVX42RPS107).

MVP for Piuma Series

Electro-thermal actuator for on-off control of fan coil Piuma valves - 65 cm cable - M30x1.5 connection

Model	Power supply	Force [N]	Control signal	Stroke [mm]	IP	Consumption		Starting time [s]	Aux micro switch
						Starting	Operation		
MVP230	110-230 V AC	170	On-off	4	44	12-50 VA	1.8 VA	60	No
MVP230M	110-230 V AC	170	On-off	4	44	12-50 VA	1.8 VA	60	Yes
MVP24	24 V AC/DC	170	On-off, PWM	4	44	4 VA	1.8 VA	60	No
MVP24M	24 V AC/DC	170	On-off, PWM	4	44	4 VA	1.8 VA	60	Yes

When power is off: actuator spindle is completely out. When power is on: actuator spindle is completely inside.

MCA for PICVs, Zone Valves, and Underfloor Heating Manifold

Protection from condensation and from leaking regardless of the valve position (throughout 360°).
MCA is designed to be adapted to the majority of underfloor heating manifolds and zone valves up to 4 mm stroke available on the market without a need of any adapters. - 70 cm bipolar/quadripolar cable and M30x1,5 connection[1)].
Another feature of the MCA is the manual override position, which allows opening and closing the valve/manifold through an easy operation and without powering the actuator.
The MCA is equipped with an on-off position indicator, visible from any directions, which allows an easy and fast installation.
The MCA is then an ideal product for installers and distributors who can use it on any manifolds/valves, but also for OEMs thanks to its high performances, its installation quickness as well as the possibility to be customized, for example, with the customer's logo.

By a simple rotation of the actuator cover, the installer can adjust it to manifolds or valves without a need of adapters (that are usually and easily lost).

Model	Power supply	Force [N]	Control signal	Stroke [mm]	IP	Consumption		Starting time [s]	Aux micro switch
						Starting	Operation		
MCA230L	110-230 V AC	140	On-off	4	54	12-50 VA	1.8 VA	60	No
MCA230LM	110-230 V AC	140	On-off	4	54	12-50 VA	1.8 VA	60	Yes
MCA24L	24 V AC/DC	140	On-off, PWM	4	54	4 VA	1.8 VA	60	No
MCA24LM	24 V AC/DC	140	On-off, PWM	4	54	4 VA	1.8 VA	60	Yes

1) M28x1,5 is available as a variant by adding PS107 at the end of the actuator part-number (e.g. MCA24LPS107).

MVR for PICVs, Zone Valves, and Underfloor Heating Manifold

On/off and PWM control - 65 cm bipolar/quadripolar cable - M30x1,5 connection[2].
Thanks to a little plastic stem adapter, MVR are suitable to a number of different valves or manifolds.

Model	Power supply	Force [N]	Control signal	Stroke [mm]	IP	Consumption		Starting time [s]	Aux micro switch	Stem output [mm]
						Starting	Operation			
MVR230	110-230 V AC	140	On-off	4	43	12-50 VA	1.8 VA	60	No	10.7-11.8
MVR230M	110-230 V AC	140	On-off	4	43	12-50 VA	1.8 VA	60	Yes	10.7-11.8
MVR24	24 V AC/DC	140	On-off, PWM	4	43	4 VA	1.8 VA	60	No	10.7-11.8
MVR24M	24 V AC/DC	140	On-off, PWM	4	43	4 VA	1.8 VA	60	Yes	10.7-11.8
MVR230C1[1]	110-230 V AC	140	On-off	4	43	12-50 VA	1.8 VA	60	No	12.3-13.4
MVR230MC1[1]	110-230 V AC	140	On-off	4	43	12-50 VA	1.8 VA	60	Yes	12.3-13.4
MVR24C1[1]	24 V AC/DC	140	On-off, PWM	4	43	4 VA	1.8 VA	60	No	12.3-13.4
MVR24MC1[1]	24 V AC/DC	140	On-off, PWM	4	43	4 VA	1.8 VA	60	Yes	12.3-13.4
MVR230C2[1]	110-230 V AC	140	On-off	4	43	12-50 VA	1.8 VA	60	No	11.3-12.4
MVR230MC2[1]	110-230 V AC	140	On-off	4	43	12-50 VA	1.8 VA	60	Yes	11.3-12.4
MVR24C2[1]	24 V AC/DC	140	On-off, PWM	4	43	4 VA	1.8 VA	60	No	11.3-12.4
MVR24MC2[1]	24 V AC/DC	140	On-off, PWM	4	43	4 VA	1.8 VA	60	Yes	11.3-12.4
MVR230C3[1]	110-230 V AC	140	On-off	4	43	12-50 VA	1.8 VA	60	No	10.3-11.4
MVR230MC3[1]	110-230 V AC	140	On-off	4	43	12-50 VA	1.8 VA	60	Yes	10.3-11.4
MVR24C3[1]	24 V AC/DC	140	On-off, PWM	4	43	4 VA	1.8 VA	60	No	10.3-11.4
MVR24MC3[1]	24 V AC/DC	140	On-off, PWM	4	43	4 VA	1.8 VA	60	Yes	10.3-11.4

When power is off: actuator spindle is completely out. When power is on: actuator spindle is completely inside.
1) Models suitable to manifolds or valves of many different brands. Please check the MVR_DBL310en datasheet for details.
2) M28x1,5 is available as a variant by adding PS107 at the end of the actuator part number (e.g., MVR230MPS107).

MVX52B for PICVs and Zone Valves

The actuator is equipped with a potentiometer, which allows to limit the valve maximum opening stroke (selectable from 20% to 100%). For example, if the potentiometer is set to 6 (60%):

- maximum stroke becomes 2.4 mm;
- with 0 V DC signal actuator spindle is in the bottom position and with 10 V DC signal actuator reaches 60% of the whole stroke (2.4 mm).

Micra® valves closure is guaranteed only by selecting 100%.
2 m tripolar cable and M30x1,5 connection.

Model	Power supply	Force [N]	Control signal	Stroke [mm]	IP	Consumption		Starting time [s]
						Starting	Operation	
MVX52B	24 V AC	140	On-off, PWM	4	44	5 VA	1.8 VA	150

When power is off: actuator spindle is completely inside.
When power is on and control signal is 0 V DC: actuator spindle is completely out (bottom position if mounting is vertical).
When power is on and control signal is 10 V DC: actuator spindle is completely inside (top position if mounting is vertical).

Electro-mechanical Actuators

MVT Actuators for Small Globe Valves with Spring and PICVs

MVT.S is a compact actuator suitable to motorize small globe valves and PICVs typically used in terminal units where fast control is required. M30x1,5 connection[1].
MVT503SB is dedicated to Libra PICVs with 4 mm stroke.

Model	Power supply	Force [N]	Control signal	Stroke [mm]	IP	Consumption [Va]	Timing [s]
MVT203S	230 V AC	300	3P - on/off	9	43	16.2	11.5 s/mm @ 50 Hz 9.4 s/mm @ 60 Hz
MVT403S	24 V AC	300	3P - on/off	9	43	2.2	
MVT503S	24 V AC	300	Proportional	9	43	3.6	
MVT503SB	24 V AC	300	Proportional	9	43	3.6	

1) M28x1,5 is available as a variant by adding PS107 at the end of the actuator part number (e.g., MVT403SPS107).

MVB Actuators for Globe Valves up to 2”

MVB is a linear actuator for VSB-VMB family valves with threaded connections ½” to 2” and flanged connections from 15 to 50 mm (VSB.F-VMB.F) and tight close-off versions (VSBP.M–VMBP.M). Also suitable to 2TGB15B–3TGB15B ½” valves.

Model	Power supply	Force [N]	Control signal	Stroke [mm]	IP	Consumption [Va]	Timing [s]
MVB22	230 V AC	450	3-position	21	50	5	37
MVB26	230 V AC	450	3-position	21	50	5	60
MVB28	230 V AC	450	3-position	21	50	5	370
MVB46	24 V AC	450	3-position	21	50	5	60
MVB46P	24 V AC	450	3-p with potentiometer (1 kΩ)	21	50	5	60
MVB36	24 V AC	450	Proportional potentiometric (165 Ω)	21	50	5	60
MVB52	24 V AC	450	Proportional	21	50	5	37
MVB56	24 V AC	450	Proportional	21	50	5	60

MVC Actuators for Small Globe Valves and PICVs

MVC is a compact range of linear actuators designed to motorize globe valves and PICVs used on hot/chilled water systems, e.g., AHUs, solar plants, heating/cooling and dehumidification coils, 2-pipe or 4-pipe FCUs and more. All models provide 300 N force over a maximum stroke of 16 mm (12 mm for models with fail-safe function) and M30x1,5 connection[1].
Models with failsafe and with Modbus RTU protocol are available.
Proportional models provide 2-10 V DC feedback signal.

Modbus

ELECTRONIC FAIL-SAFE

Model	Emerg. return	Control signal	Power supply	Speed [s/mm]	Force [N]	IP	Valves with spring		Valves without spring				
							VLX / VLX.P 3/4”-1 ¼” stroke 4 mm	V.XT 1/2”-3/4” stroke 5,5 mm	VSB.T-VMB.T 3/4”-2” stroke 5,5 mm	2-3TGB15B 1/2” stroke 11,5 mm	2-3TBB.T 1/2”-2” stroke 12 mm	2TGA.BT 3/4”-2” stroke 8,5 mm	Valves other manufacturers stroke up to 16 mm
MVC203	No	3-position	230 V AC	10	300	54	-	-	●	With AG74-03)	●	●	●
MVC403	No		24 V AC				-	-	●	With AG74-03)	●	●	●
MVC503	No	Prop.					-	-	●	With AG74-03)	●	●	●
MVC503R	Yes		24 V AC/DC	5			●	●	●	With AG74-03)	●	●	● (STROKE max 12 mm)
MVC503R-MB	Yes	Modbus	24 V AC/DC	5			●	●	●	With AG74-03)	●	●	● (STROKE max 12 mm)

1) M28x1,5 is available as a variant by adding PS107 at the end of the actuator part number (e.g., MVC203PS107).

ENERGY VALVE

PID

ELECTRONIC FAIL-SAFE

NEW

Sensors are not included

MVC-2-RS

Multiprotocol Network actuator for PICV and Globe Valves with energy and temperature control functions, BACnet and Modbus protocols

Modbus

BACnet

MVC-2-RS is a compact actuator designed to control hot/cool water flow rate in two/four pipes terminal units, zone, small reheating and dehumidifcation coils. It can be controlled by a Modbus RTU or BACnet MS/TP device via a RS485 network bus as well as by a proportional (modulating) control signal and it is also equipped with a USB port for local configuration and diagnostics.
When MVC503x-2-RS is used in combination with a PICV valve and it is equipped with 1 or 2 temperature sensors, it can deliver the energy calculation and power control function. Embedded control loop for supply/return and deltaT are available.

Model	Emerg. return	Control signal	Power supply	Speed [s/mm]	Force [N]	IP
MVC503-2-RS	No	BACnet MS/TP, Modbus RTU and proportional switch selectable	24 V AC/DC	10	300	54
MVC503R-2-RS	Yes					

1) M28x1,5 is available as a variant by adding PS107 at the end of the actuator part number (e.g., MVC503-2-RSPS107).

Model	VALVES WITHOUT SPRING					VALVES WITH SPRING			
	VSB.T-VMB.T 3/4" .. 2" Stroke 5.5 mm	2-3TGB15B 1/2" Stroke 11.5 mm	2-3TBB.T 1/2" .. 2" Stroke 12 mm	2TGA.BT 3/4" .. 2" Stroke 8.5 mm	VALVES OF OTHER MANUFACTURERS Stroke max 12 mm	VLX / VLX.P 1/2" .. 1 ¼" Stroke 4 mm	VSXT/VMXT/VTXT 1/2" .. 3/4" Stroke 5.5 mm	VSXT.PBP 1 ½" Stroke 5.5 mm	VSBT.-VMBT. 3/4" .. 1 ½" Stroke 5.5 mm
MVC503x-2-RS	●	● AG74-03	●	●	●	●	●	●	●

MVE

Universal Actuator for Globe Valves up to 2200 N Force

The MVE is a flexible electro-mechanical actuator for the control of 2-way and 3-way globe valves in: heating and cooling systems, air handling units, district heating plants, industrial temperature control systems. The MVE can be controlled either by a proportional (modulating) signal or by an increase/decrease (floating) signal simply changing switch settings on the field. It is designed for an easy installation to any iSMA CONTROLLI flanged valve. Linkage kits are available for threaded valves as well as for valves of other manufacturers.
The actuator has a fine resolution (500 steps on the full stroke range) for a very accurate fluid control and it is able to self-calibrate on a different stroke without a need of any user action.
A plug&play function is available as well calibrating the actuator on the valve at the very first power-on only. The MVE implements a smart control algorithm with a self-diagnostic and alarm functionality in case of an unexpected operation; feedback of alarms to the user is provided by LEDs (green and red) on the control board.
The MVE is available with standard yoke and with a compact yoke for applications, where compact dimensions are required and each version can be available with close-off force 400 N, 600 N, 1000 N, 1500 N, and 2200 N.

MVE5x - MVE5xS
The MVE is available with a very low voltage power supply 24 V AC or 24 V DC.

MVE2x - MVE2xS
The MVE is also available with a high voltage power supply 230 V AC with the same functionality of the 24 V AC/DC.

Model		Power supply		Force [N]	Control signal	Stroke [mm]	IP	Consumption [VA]		Timing [s]			
										Stroke [mm]			3P.
		MVE5x	MVE2x					Running	Holding	5/15	15/25	25/60	
MVE504	MVE204*	24 V AC/DC	230 V AC	400	3p floating and proportional switch selectable. Control range 0-10 V DC, 2-10 V DC, 0-5 V DC, 5-10 V DC, 2-6 V DC, 6-10 V DC, and 4-20 mA	5-60	IP54	10	8	15 s	20 s	30 s	60 s
MVE506	MVE206*			600				13	11				
MVE510	MVE210*			1000				18	11				
MVE515	MVE215*			1500				21	13				
MVE522	MVE222*			2200				25	10				
MVE504S	MVE204S*	24 V AC/DC	230 V AC	400	3p floating and proportional switch selectable. Control range 0-10 V DC, 2-10 V DC, 0-5 V DC, 5-10 V DC, 2-6 V DC, 6-10 V DC, and 4-20 mA	5-30 (short yoke)	IP54	10	8	15 s	20 s	30 s	60 s
MVE506S	MVE206S*			600				13	11				
MVE510S	MVE210S*			1000				18	11				
MVE515S	MVE215S*			1500				21	13				
MVE522S	MVE222S*			2200				25	10				
MVEAV		MVE assembly on valve body											

* MVE2x - MVE2xS are not UL Listed.

MVE.R

Electric Actuators with Emergency Fail-safe Function

ELECTRONIC FAIL-SAFE

All features such as input/output signals, automatic or manual calibration, diagnostic, resolution, auxiliary end switches, manual override, etc., are the same as standard MVE actuators.
Additionally MVE.R provides an electronic emergency function based on a supercapacitor technology in the event of a power failure.
Emergency position (**retracted or extended stem**) selectable by PC board.
Opening/closing times, also in case of emergency return: approx. 1 mm/s for proportional control or 60 s (regardless of valve stroke) for floating control.
Charging time about 130 s.
Supercapacitor life: 10 years

Model		Power supply		Force [N]	Control signal	Stroke [mm]	IP	Consumption [VA]		Timing [s]			
										Stroke [mm]			3P.
		MVE5x	MVE2x					Running	Holding	5/15	15/25	25/60	
MVE504R	MVE204R	24 V AC/DC	230 V AC	400	3p floating and proportional switch selectable. Control range 0-10 V DC, 2-10 V DC, 0-5 V DC, 5-10 V DC, 2-6 V DC, 6-10 V DC and 4-20 mA	5-60	IP54	10	8	15 s	20 s	30 s	60 s
MVE506R	MVE206R			600				13	11				
MVE510R	MVE210R			1000				18	11				
MVE515R	MVE215R			1500				21	13				
MVE504SR	MVE204SR	24 V AC/DC	230 V AC	400	3p floating and proportional switch selectable. Control range 0-10 V DC, 2-10 V DC, 0-5 V DC, 5-10 V DC, 2-6 V DC, 6-10 V DC and 4-20 mA	5-30 (short yoke)	IP54	10	8	15 s	20 s	30 s	60 s
MVE506SR	MVE206SR			600				13	11				
MVE510SR	MVE210SR			1000				18	11				
MVE515SR	MVE215SR			1500				21	13				
MVEAV		MVE assembly on valve body											

MVE IP65

More Protection for More Performance

MVE IP65 is the actuator suitable for difficult environments that require an IP65 degree of protection. The cable gland and the internal gaskets supplied guarantee the actuator to operate at maximum performance even in outdoor environments (protected from direct exposure to the elements).
The IP65 variant is available for all MVE and MVE.R IP54 models.
To request it, it is necessary to add the wording "-65" at the end of the standard code.
EXAMPLE: MVE506SR → MVE506SR-65

MVE-2-RS

Multiprotocol Network actuator for PICV and Globe Valves with energy and temperature control functions, BACnet and Modbus protocols

Sensors are not included

MVE-2-RS is a multiprotocol network actuator device equipped with 2 temperature inputs and with RS485 (**Modbus RTU** and **BACnet MS/TP**) network connectivity for **Supply&Return and DeltaT control and limitation** as well as for integration with the BMS.
The actuator is able to implement a temperature control loop without the need of a BMS controller with significant savings in terms of hardware (eg. controllers with less I/Os, more compact electrical panels) and field wiring.
The actuator can be controlled by a Modbus RTU or BACnet MS/TP device via an RS485 network bus as well as by a proportional (modulating) control signal.
When it is installed on PICV valves and both temperature sensors are connected the **actuator can calculate the flow rate** using the valve characteristics and therefore **calculate the energy delivered to the coil**. It can be used to **control the thermal power transferred** from the coil or limits the **power consumption** and estimate the **energy consumption**.
The compact models MVExxxS-2-RS are equipped with a short yoke for applications with limited space. MVE-2-RS is also equipped with a USB port for local configuration and diagnostics. When USB cable is connected, the motor can't operate.

Model		Power supply		Force [N]	Control signal	Stroke [mm]	IP	Consumption [VA]		Timing [s]
		MVE5x	MVE2x					Running	Holding	Stroke 45 mm
MVE504-2-RS	MVE204-2-RS	24 V AC/DC	230 V AC	400	BACnet MS/TP, Modbus RTU and proportional switch selectable. Control range: 0-10 V DC, 2-10 V DC, 0-5 V DC, 5-10 V DC, 2-6 V DC, 6-10 V DC and 4-20 mA	5-60	IP54	10	8	16
MVE506-2-RS	MVE206-2-RS			600				13	11	
MVE510-2-RS	MVE210-2-RS			1000				18	11	
MVE515-2-RS	MVE215-2-RS			1500				21	13	
MVE522-2-RS	MVE222-2-RS			2200				25	13	
MVE504S-2-RS	MVE204S-2-RS	24 V AC/DC	230 V AC	400	BACnet MS/TP, Modbus RTU and proportional switch selectable. Control range: 0-10 V DC, 2-10 V DC, 0-5 V DC, 5-10 V DC, 2-6 V DC, 6-10 V DC and 4-20 mA	5-30 (short yoke)	IP54	10	8	16
MVE506S-2-RS	MVE206S-2-RS			600				13	11	
MVE510S-2-RS	MVE210S-2-RS			1000				18	11	
MVE515S-2-RS	MVE215S-2-RS			1500				21	13	
MVE522S-2-RS	MVE222S-2-RS			2200				25	13	
With Emergency Fail-safe Function	MVE504R-2-RS	24 V AC/DC	-	400	BACnet MS/TP, Modbus RTU and proportional switch selectable. Control range: 0-10 V DC, 2-10 V DC, 0-5 V DC, 5-10 V DC, 2-6 V DC, 6-10 V DC and 4-20 mA	5-60	IP54	10	8	16
	MVE506R-2-RS			600				13	11	
	MVE510R-2-RS			1000				18	11	
	MVE515R-2-RS			1500				21	13	
	MVE504SR-2-RS	24 V AC/DC	-	400	BACnet MS/TP, Modbus RTU and proportional switch selectable. Control range: 0-10 V DC, 2-10 V DC, 0-5 V DC, 5-10 V DC, 2-6 V DC, 6-10 V DC and 4-20 mA	5-30 (short yoke)	IP54	10	8	16
	MVE506SR-2-RS			600				13	11	
	MVE510SR-2-RS			1000				18	11	
	MVE515SR-2-RS			1500				21	13	
MVEAV		MVE-2-RS assembly on valve body								

MVH Globe Valve Actuators with Manual Override

For VSB, VSB.F and VMB, VMB.F valves only, add linkage AG62.

Model	Power supply	Force [N]	Control signal	Stroke [mm]	IP	Consumption [VA]	Timing depending on valve stroke [s]		
							16.5 mm	25 mm	45 mm
MVH26	230 V AC	1500	On/off floating	0-45	55	12	22	33	60
MVH46	24 V AC	1500	On/off floating	0-45	55	12	22	33	60
MVH36	24 V AC	1500	Proportional potentiometric	10-45	55	12	22	33	60
MVH56	24 V AC	1500	Proportional control selectable range	10-45	55	12	22	33	60
MVH56E	24 V AC/DC	1500	3-position and/or proportional control (selectable) Ranges: 6 to 9/4 to 7/8 to 11/0 to 10/2 to 10/1 to 5 V DC; current 4 to 20 mA. Default setting: 0 to 10 V DC	5-50	55	12	26	40	70
MVHE3K	24 V AC/DC	3000		5-50	55	25	26	40	70

MVH56E/A Globe Valve Actuators with Spring Return

Series with direct-reverse action. For VSB, VSB.F and VMB, VMB.F valves only, add linkage AG62.

Model	Power supply	Force [N]	Control signal	Stroke [mm]	IP	Timing depending on valve stroke [s][1]			Consumption [VA]	
						16.5 mm	25 mm	45 mm	Running	Holding
MVH56EA	24 V AC/DC	700	V DC/mA proportional control or floating control. Default setting: 0 to 10 V DC	5-50	55	17 (35)	25 (50)	48 (90)	13	8
MVH56EC	24 V AC/DC	700		5-50	55	17 (35)	25 (50)	48 (90)	13	8

1) The values in brackets indicate the return time by spring return. By spring return: MVH56EA closes 2-way valves and direct way in 3-way valves, MVH56EC opens 2-way valves and direct way in 3-way valves. This is valid for all valves except 2FGA, 2FGA.B, 2FAA, 2FAA150B in which it works the opposite way.

Action of spring return on power failure

2-way valves	MVH56EA	MVH56EC
VSB	VALVE CLOSED	VALVE OPEN
VSB.F	VALVE CLOSED	VALVE OPEN
2TBB	VALVE CLOSED	VALVE OPEN
2FGB	VALVE CLOSED	VALVE OPEN
2FGA	VALVE OPEN	VALVE CLOSED
2FSA	VALVE CLOSED	VALVE OPEN
2FAA	VALVE OPEN	VALVE CLOSED
2FAA.P	VALVE OPEN	VALVE CLOSED
2FGB.B	VALVE CLOSED	VALVE OPEN
2FSA.B	VALVE CLOSED	VALVE OPEN
2FAA.B	VALVE CLOSED	VALVE OPEN
2FAA150B/2FGA200B	VALVE OPEN	VALVE CLOSED

3-way valves	MVH56EA	MVH56EC
VMB	DIRECT WAY CLOSED	DIRECT WAY OPEN
VMB.F	DIRECT WAY CLOSED	DIRECT WAY OPEN
3TBB	DIRECT WAY CLOSED	DIRECT WAY OPEN
3FGB	DIRECT WAY CLOSED	DIRECT WAY OPEN
3FSA	DIRECT WAY CLOSED	DIRECT WAY OPEN
3FSA.S	DIRECT WAY CLOSED	DIRECT WAY OPEN
3FAA	DIRECT WAY CLOSED	DIRECT WAY OPEN
3FAA.P	DIRECT WAY CLOSED	DIRECT WAY OPEN

Valves & Actuators Accessories

Linkage Kits

Model	Description
AF24	Linkage kit for MDL on valves VFA DN25-100
AF25	Linkage kit for MDL on valves VFA DN125-200
AG22	Linkage kit for MVB on V500
AG40	Linkage kit for MVB ON VB7200/7300
AG51	Linkage kit for MVE-MVH on valves VMB16, VBG, VSG (45 mm stroke) and SS, DS, 3V, VSS, VBS, VMS, VBAA
AG52	Linkage kit for MVE on threaded valves VSB, VMB and VSB.F, VMB.F
AG53	Linkage kit for MVE on Satchwell valves
AG54	Linkage kit for MVH on Satchwell valves
AG60-07	Linkage kit for MVE on Danfoss valves
AG60-10/79	Linkage kit for MVE on Honeywell valves
AG62	Linkage kit for MVH on threaded valves, VSB, VMB and VSB.F, VMB.F
AG63	Linkage kit for MVE.S on threaded valves VSB, VMB and VSB.F, VMB.F
AG64	Linkage kit for MVH on old valves SS-DS-VM-3V DN15-65 Linkage kit for MVLHT

Model	Description
AG65	Linkage kit for MVH on old valves SS-DS-VM-3V DN ≥80 Linkage kit for MVLHT
AG66	Linkage kit for MVE on JOHNSON CONTROL VB7816 valves
AG69	Linkage kit for MVE on MUT valves
AG72	Linkage kit for MVA on Micra® valves
AG73	Linkage kit for MVT203, MVT403, MVT503 on SATCHWELL MZX, VZX, FEU, MEU, VEU valves
AG70-10/70-14	Linkage kit for MVE on Siemens valves
AM71	Linkage kit for MDB on LAZZARI shoe valves
AM72	Linkage kit for MDB on M3 & M4 shoe valves
AG74-01	Linkage kit for MVC and MVT.03 on VSB.T-VMB.T and 2TGA.BT valves
AG74-03	Linkage kit for MVC and MVT.03 on 2-3TGB.B valves
AG81	Linkage Kit for MVH with 2-3FIA valves
AG82	Linkage Kit for MVE with BELIMO H2...X-S and H3...X-S valves

Accessories for Actuators

Model	Description
244	Stem heater 24 V AC for MVB actuators on VSB, VMB, VSB.F, VMB.F valves
248	Stem heater 24 V AC for MVH and MVE actuators with threaded or flanged valves
D36	One stroke-end auxiliary microswitch adjustable on the whole stroke for MVB
DMDA	Two auxiliary microswitches for MDA
DMVE	Two auxiliary microswitches for MVE, MVH.E
DMVH	Two auxiliary microswitches adjustable on the whole stroke for MVH
MVBC	Rain-proof protection
MVBD	Microswitch driven by manual control knob. Supplied only factory-mounted
MVBHT	Spacer for MVB. To be used with V.B/V.BF valves with temperature from 120°C to 140°C
MVHPA2	1000 ohm auxiliary potentiometer for MVH26
MVHPA4	1000 ohm auxiliary potentiometer for MVH46
MVHT	Spacer for high temperature for MVH. To be used with valve bodies with fluid temperature higher than 150°C (2F-3F)

All accessories, except MVBD, are supplied separately. Mounting is carried out by the user.

Flanges Options

Model	Description
A125-2	Drilled flanges with ANSI (ASA) 125 bolt holes for 2-way valves 2FGA.B, 2FGB, 2FGB.B, 2FSA (DN50 to65), 2FSA.B (DN50 to 80), 2FGA (DN25, 32, 50, 65)
A125-3	Drilled Flanges with ANSI (ASA) 125 bolt holes for 3-way valves 3FGB, 3FSA (DN50 to 65)
A150-2	Drilled flanges with ANSI (ASA) 150 bolt holes for 2-way valves 2FAA150B, 2FSA (DN50 to 65), 2FSA.B (DN50 to 80), 2FAA.B (DN50 to 125), 2FAA (DN32 to 65)
A150-3	Drilled Flanges with ANSI (ASA) 150 bolt holes for 3-way valves 3FAA (DN50 to 125), 3FSA (DN50 to 65)
A300-2	Drilled Flanges with ANSI (ASA) 300 bolt holes for 2-way valves 2FSA, 2FSA.B, 2FAA.B (DN32 to 65 and DN100 to 125), 2FAA (DN15 and DN32 to 65)
A300-3	Drilled Flanges with ANSI (ASA) 300 bolt holes for 3FSA, 3FAA (DN32 to 65 and DN100 to 125)

Insulation Jackets for 2-& 3-way Valves

(Supplied separately from the valve body, mounting to be arranged by the user)

Model	Description
54304-01	Thermal insulation for VSXT09P, VSXT10P, VSXT11P, VSXT12P, VSXT13P, VSXT1P and VSX09P, VSX10P, VSX11P, VSX12P, VSX13P, VSX1P
54304-02	Thermal insulation for VSXT21P and VSX21P
54304-03	Thermal insulation for VMXT09P, VMXT10P, VMXT11P, VMXT12P, VMXT13P, VMXT1P and VMX09P, VMX10P, VMX11P, VMX12P, VMX13P, VMX1P
54304-04	Thermal insulation for VMXT21P and VMXT21P
54304-05	Thermal insulation for VTXT09P, VTXT10P, VTXT11P, VTXT12P, VTXT13P, VTXT1P and VTX09P, VTX10P, VTX11P, VTX12P, VTX13P, VTX1P
54304-06	Thermal insulation for VTXT09P4, VTXT10P4, VTXT11P4, VTXT12P4, VTXT13P4 and VTX09P4, VTX10P4, VTX11P4, VTX12P4, VTX13P4
54304-07	Thermal insulation for VTXT21P and VTX21P
54304-08	Thermal insulation for VSXT24P, VSXT26P and VSX24P, VSX26P
54304-09	Thermal insulation for VMXT24P, VMXT26P and VMX24P, VMX26P
54304-10	Thermal insulation for VTXT24P, VTXT26P and VTX24P, VTX26P
55047-015	thermal insulation for VLX1, VLX1P, VLX2 and VLX2P valves
55047-020	thermal insulation for VLX3 and VLX3P valves
55047-025	thermal insulation for VLX4 and VLX4P valves
55047-032	thermal insulation for VLX5 and VLX5P valves
55047-040	thermal insulation for VLX6P valves
55047-050	thermal insulation for VLX8P valves
GVB15	Thermal insulation for 3TGB15B and 3TGB15F
GVB3	Thermal insulation for VSB3, VMB3, VSB3F, VMB3F, VSB3T, VMB3T, DN 3/4"
GVB4	Thermal insulation for VSB4, VMB4, VSB4F, VMB4F, VSB4T, VMB4T, DN 1"
GVB5	Thermal insulation for VSB5, VMB5, VSB5F, VMB5F, VSB5T, VMB5T, DN 1 ¼"

Model	Description
GVB6	Thermal insulation for VSB6, VMB6, VSB6F, VMB6F, VSB6T, VMB6T, DN 1 ½"
GVB8	Thermal insulation for VSB8, VMB8, VSB8F, VM8F, VSB8T, VMB8T, DN 2", KV30
GVB8A	Thermal insulation for VSB8A, VMB8A, VSB8AF, VMB8AF, DN 2", KV40
GVB40	Thermal insulation for 2FGB40 AND 3FGB40
GVB50	Thermal insulation for 2FGB50 AND 3FGB50
GVB65	Thermal insulation for 2FGB65 AND 3FGB65
GVB80	Thermal insulation for 2FGB80 AND 3FGB80
GVB100	Thermal insulation for 2FGB100 AND 3FGB100
GVB125	Thermal insulation for 2FGB125 AND 3FGB125
GVB150	Thermal insulation for 2FGB150 AND 3FGB150
GVB40PS89	Thermal insulation for 2FGB40PS89 AND 3FGB40PS89
GVB50PS89	Thermal insulation for 2FGB50PS89 AND 3FGB50PS89
GVB65PS89	Thermal insulation for 2FGB65PS89 AND 3FGB65PS89
GVB80PS89	Thermal insulation for 2FGB80PS89 AND 3FGB80PS89
GVB100PS89	Thermal insulation for 2FGB100PS89 AND 3FGB100PS89
GVB125PS89	Thermal insulation for 2FGB125PS89 AND 3FGB125PS89
GVB4PS150	Thermal insulation for VSB4PS150, VMB4PS150, VSB4TPS150, VMB4TPS150, DN 1"
GVB5PS150	Thermal insulation for VSB5PS150, VMB5PS150, VSB5TPS150, VMB5TPS150, DN 1 ¼"
GVB6PS150	Thermal insulation for VSB6PS150, VMB6PS150, VSB6TPS150, VMB6TPS150, DN 1 ½"
GVB8PS150	Thermal insulation for VSB8PS150, VMB8PS150, VSB8TPS150, VMB8TPS150, DN 2", KV30
GVB8APS150	Thermal insulation for VSB8APS150, VMB8APS150, DN 2", KV40

Insulation Jackets for Actuators

Model	Description
GMDL	Insulation jackets (2 shell with Velcro strips) for MDL actuators
GMVE	Insulation jackets (2 shell with Velcro strips) for MVE actuators
GMVE.S	Insulation jackets (2 shell with Velcro strips) for MVE.S actuators (short yoke)
GMVH	Insulation jackets (2 shell with Velcro strips) for MVH actuators
GMVHA	Insulation jackets (2 shell with Velcro strips) for MVH56EA actuator
GMVHC	Insulation jackets (2 shell with Velcro strips) for MVH56EC actuators
GMVT	Insulation jackets for MVT 300 N actuators

Motorized Ball Valves with Characterized Flow Control

New performing range of brass valves with chrome plated brass balls and electric rotary actuators with high IP level.

VSS-VSD, VSC-VDC

Ball Valves Range

»2-way and 3-way valves (mixing/diverting) with high Kvs values
»Tight close-off (0% leakage)
»Fluids temperature from -20°C to +130°C
»Up to 10 bar close-off pressure
»Valve bodies with high pressure rates PN32 and PN40
»Equal-percentage flow curve for modulating models only

Model		Type	DN	Kvs [m³/h]	P max [bar]	Actuator [Nm]	Delta P [bar]	Fluid temperature [°C]	
								Min.	Max.
On - Off	VSS2	2-way	1/2"	20	32	10	10	-20	+130
	VSS3		3/4"	45					
	VSS4		1"	60					
	VSS5		1 ¼"	100					
	VSS6		1 ½"	120	16	16	3,5	-15	+110
	VSS8		2"	220					
	VSD3	3-way diverting	3/4"	9.6	32	10	10	-20	+130
	VSD4		1"	11.3					
	VSD5		1 ¼"	19.2	16	16	3,5	-15	+110
	VSD6		1 ½"	27.7					
	VSD8		2"	57					
Modulat-ing	VSC2	2-way	1/2"	4	16	16	3,5	-10	+130
	VSC3		3/4"	6.3					
	VSC4		1"	10					
	VSC5		1 ¼"	16					
	VSC6		1 ½"	25					
	VSC8		2"	40					
	VSC8-63		2"	63					
	VDC2	3-way mixing	1/2"	4					
	VDC3		3/4"	6.3					
	VDC4		1"	10					
	VDC5		1 ¼"	16					
	VDC6		1 ½"	25					
	VDC8		2"	40					
	VDC8-63		2"	63					

MVS

Actuators Range

»No need of stem heater with fluids below 0°C: the actuator has its own system to prevent ice
»High protection degree IP65 on most actuators
»Auxiliary microswitches on all actuators
»Opening or closing time: 40 seconds (10 Nm models) or 60 seconds (16 Nm models)
»Manual override

10 Nm

16 Nm

Model	Power supply	Torque [Nm]	Control signal	Rotation angle	IP	Stroke time [s]	Aux. end switch	Manual override
MVS210	230 V AC	10	On-off	90°	42	40	Yes	No
MVS410	24 V AC							
MVS216	230 V AC	16	On-off	90°	65	60		Yes
MVS416	24 V AC							
MVS416F	24 V AC	16	3p	90°	65	60	Yes	Yes
MVS516	24 V AC/DC	16	0-10 V DC	90°	65	60	No	Yes

Accessories

Code	Description
MVSHT	Spacer for MVS.16 actuator useful in case of high temperature fluids or when insulation is needed (chilled water)

Valves/Actuators Cross Reference

Valves series	Control	Type	DN	Kvs	Actuators		
					MVSx10 10 Nm	MVSx16 16 Nm	MVS516 16 Nm
					On-off	On-off/3p	0-10 V DC
VSS	On - Off	2-way	1/2”-1 ¼”	20-100	●	-	-
			1 ½”-2”	120-220	-	●	-
VSD		3-way diverting	3/4”-1”	9.6-11.3	●	-	-
			1 ¼”-2”	19.2-57	-	●	●
VSC	0 - 10 V DC	2-way	1/2”-2”	4-40	-	●	●
VDC		3-way mixing	1/2”-2”	4-40	-	●	●

Rotary Valves

VFA Butterfly Valves

The valves are ready for mounting on MDA actuators.
They can also be motorized by MDL actuators by means of AF24 and AF25 adapters.

Model	DN	Kvs	Max. differential pressure [bar]		Other features
			MDA22, MDA42, MDA52 MDL24, MDL44, MDL54	MDA24, MDA44, MDA54 MDL26, MDL46, MDL56	
VFA25	25	26	6	-	• PN16 (PN6, PN10) • Spheroidal cast-iron body (EN-JS1030) • Shaft tight O-Ring • Seat EPDM • Fluid temperature: -10°C to 100°C • Close-off leakage: leakage rate A (DIN EN 12266-1)
VFA32	32	26.5		-	
VFA40	40	49.6		-	
VFA50	50	116		-	
VFA65	65	259		-	
VFA80	80	377		-	
VFA100	100	763		-	
VFA125	125	1030	-	6	
VFA150	150	1790	-	3	
VFA200	200	3460	-		

Rotary Actuators

MDA Actuators for Butterfly Valves

Bidirectional actuator for VFA butterfly valves - Manual control - Supplied with linkage for mounting on valve body.

Model	Power supply	Torque [Nm]	Control signal	Rotation angle	IP	Timing [s]	Other features
MDA22	230 V AC 50/60 Hz	20	Floating	90°	54	90	For VFA valves up to DN100
MDA24		40	Floating	90°	54	150	For VFA valves from DN125 to DN200
MDA42	24 V AC/DC	20	Floating	90°	54	90	For VFA valves up to DN100
MDA44		40	Floating	90°	54	150	For VFA valves from DN125 to DN200
MDA52		20	Proprotional 0-10 V	90°	54	90	For VFA valves up to DN100
MDA54		40	Proprotional 0-10 V	90°	54	150	For VFA valves from DN125 to DN200
MDAV1	MDA actuators are supplied NOT mounted on valve bodies. In case the actuator-valve assembly is required, order the specific part number (MDAV1) together with the models of actuator and valve body.						
MDAV2	DMDA microswitch assembling on MDA actuator						

MDL Actuators for Butterfly Valves, Dampers, Burners

Bidirectional motor - Input signal P.C. board - Power consumption 12 VA - 2 output shafts: main and secondary shaft Ø 9.5 x 9.5 mm - Manual override.

Model	Power supply	Torque [Nm]	Control signal	Adjustable angular travel	IP	Timing [s. for 90°]	Max damper surface [m²]
MDL22	230 V AC	6	On/off, floating	0 to 160	55	15-27	1.2
MDL24	230 V AC	20	On/off, floating	0 to 160	55	45-80	4
MDL26	230 V AC	30	On/off, floating	0 to 160	55	60-107	6
MDL42	24 V AC	6	On/off, floating	0 to 160	55	15-27	1.2
MDL44	24 V AC	20	On/off, floating	0 to 160	55	45-80	4
MDL46	24 V AC	30	On/off, floating	0 to 160	55	60-107	6
MDL62	110 V AC	6	On/off, floating	0 to 160	55	15-27	1.2
MDL64	110 V AC	20	On/off, floating	0 to 160	55	45-80	4
MDL66	110 V AC	30	On/off, floating	0 to 160	55	60-107	6
MDL32	24 V AC	6	Proportional-potentiometric (165 ohm)	55 to 160	55	15-27	1.2
MDL34	24 V AC	20	Proportional-potentiometric (165 ohm)	55 to 160	55	45-80	4
MDL36	24 V AC	30	Proportional-potentiometric (165 ohm)	55 to 160	55	60-107	6
MDL52	24 V AC	6	V DC/current proportional control. Ranges: 6-9, 4-7, 8-11, 0-10, 1-5 V DC, or current 4-20 mA	55 to 160	55	15-27	1.2
MDL54	24 V AC	20		55 to 160	55	45-80	4
MDL56	24 V AC	30		55 to 160	55	60-107	6

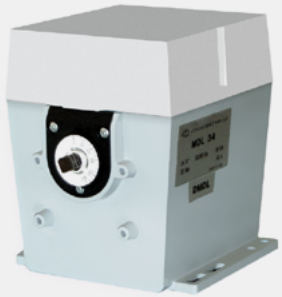

VARIANTS: in case the MDL2./4. actuators are needed to be supplied with 1 Kohm auxiliary potentiometer, add PA2 for MDL2., PA4 for MDL4. and PA6 for MDL6.: e.g., MDL24PA2, MDL46PA4 or MDL66PA6. In special applications, the actuators can be supplied with 2 or 3 auxiliary potentiometers.

Options

Model	Description
MDLS5	Electronic card input signal, range 6-9, 4-7, 8-11, 1-5 V DC, 4-20 mA for MDL32/34/36
MDLV5	Electronic card input signal, range 0-10 V DC, 4-20 mA with adjustable start point and span for MDL32/34/36
DMDL	Two auxiliary microswitches SPDT 10 (3) A - 240 V AC adjustable on the whole stroke for MDL
MDLA1	Damper drive linkage for MDL
MDLA2	Linkage for mounting MDL when replacing SL
MDLPA2	Board with 1 Kohm auxiliary potentiometer for MDL2
MDLPA4	Board with 1 Kohm auxiliary potentiometer for MDL4
MDLPA6	Board with 1 Kohm auxiliary potentiometer for MDL6
YS7	Crank-arm in addition to MDLA1 composed of 2 joints and 8 mm rod for dampers with 10 to 18 mm shaft with MDL actuator
DMDA	Two auxiliary microswitches for MDA

MDB Air Damper Actuators Without Spring Return

Model	Power supply	Torque [Nm]	Control signal	IP	Timing [s. for 90°]	Aux microswitch	Max. damper surface [m²]
MDB42	24 V AC/DC	5	2-3 pos.	52	60-120	-	1
MDB42M			2-3 pos.	54	60-120	2	1
MDB52			2-10 V	52	60-120	-	1
MDB24	85-265 V AC	10	2-3 pos.	54	< 150	-	2
MDB24M			2-3 pos.	54	< 150	1	2
MDB44	24 V AC/DC		2-3 pos.	54	< 150	-	2
MDB44M			2-3 pos.	54	< 150	1	2
MDB54			2-10 V	54	< 150	-	2
MDB26	85-265 V AC	15	2-3 pos.	54	< 150	-	3
MDB26M			2-3 pos.	54	60-120	1	3
MDB46	24 V AC/DC		2-3 pos.	54	< 150	-	3
MDB46M			2-3 pos.	54	60-120	1	3
MDB56			2-10 V	54	< 150	-	3
MDB28	85-265 V AC	20	2-3 pos.	54	< 150	-	4
MDB28M			2-3 pos.	54	< 150	2	4
MDB48	24 V AC/DC		2-3 pos.	54	< 150	-	4
MDB48M			2-3 pos.	54	< 150	2	4
MDB58			2-10 V	54	< 150	-	4

MDS Air Damper Actuators with Emergency Fail Safe Function

Model	Power supply	Torque [Nm]	Control signal	IP	Timing [s. for 90°]	Aux microswitch	Max. damper surface [m²]
MDS206R	230 V AC	6	2 pos.	54	60-80	-	1.5
MDS206RM	230 V AC	6	2 pos.	54	60-80	1	1.5
MDS406R	24 V AC/DC	6	2 pos.	54	60-80	-	1.5
MDS406RM	24 V AC/DC	6	2 pos.	54	60-80	1	1.5
MDS506R	24 V AC/DC	6	0-10 V	54	60-80	-	1.5
MDS506RM	24 V AC/DC	6	0-10 V	54	60-80	1	1.5
MDS210R	230 V AC	10	2 pos.	54	60-80	-	2
MDS210RM	230 V AC	10	2 pos.	54	60-80	1	2
MDS410R	24 V AC/DC	10	2 pos.	54	60-80	-	2
MDS410RM	24 V AC/DC	10	2 pos.	54	60-80	1	2
MDS510R	24 V AC/DC	10	0-10 V	54	60-80	-	2
MDS510RM	24 V AC/DC	10	0-10 V	54	60-80	1	2
MDS220R	230 V AC	20	2 pos.	54	90-125	-	4
MDS220RM	230 V AC	20	2 pos.	54	90-125	2	4
MDS420R	24 V AC/DC	20	2 pos.	54	90-125	-	4
MDS420RM	24 V AC/DC	20	2 pos.	54	90-125	2	4
MDS5205R	24 V AC/DC	20	0-10 V	54	90-125	-	4
MDS520RM	24 V AC/DC	20	0-10 V	54	90-125	2	4

For a proper valve selection, the following factors need to be defined:

- hydraulic circuit: constant flow (3-way) or variable flow (2-way);
- maximum hydraulic pressure for the circuit -- > PN;
- maximum and minimum fluid temperature;
- fluid type (e.g., water, water+glycol, steam, thermal oil, etc.);
- valve function: on/off control, linear flow control or EQM flow control.

Once we have identified the type of valve, its size and the actuator that will motorize it need to be selected.

To select the correct type and size of valve, the following factors need to be taken into consideration:

- maximum working pressure to select the proper PN;
- maximum temperature and type of fluid;
- maximum differential pressure achievable by the valve/actuator assembly;
- Pressure drop as a consequence of the flow rate;
- flow characteristic, rangeability, authority.

Each valve is identified by its flow coefficient called Kvs.
Kvs, in metric system, represents the flow in m^3/h of water (specific weight=1) at the temperature of 15.5°C, which causes a pressure drop of 1 kg/cm^2 (1 bar), when the valve is fully open.
In the USA, the flow coefficient is called Cv, where Kvs = 0.865 Cv
The value of Kvs represents the valve size: --> control valves size needs to be chosen according to the calculated Kvs and not according to the pipe size.
In any case, valve size must not be larger than pipe size.
For calculating the Kvs, we need to know: flow rate and differential pressure. Differential pressure can be selected equal to the pressure drop in the heat exchanger.
Kvs can be calculated:

- using the appropriate formulas available on page 54 for water or steam;
- using the diagrams on pages 52 and 53;
- using our dedicated software for PC (available online).

Each type of valve is subject to a maximum pressure value = nominal working pressure, indicated by PN (kg/cm^2) depending on the valve raw material.
The maximum differential pressure value represents the maximum differential pressure between inlet and outlet of the valve, when the valve is fully closed.
This value depends on both the actuator power, which must provide full opening and full closing, and on the mechanical-structural limitations of the valve, as construction type and valve body material, stem and plug type and material, stem packing, etc.

After having selected the necessary Kvs value, we should select the size of the valve matching a Kvs value as close as possible to the calculated Kvs.
The identified valve size can achieve several values of maximum differential pressure according to the actuator.

Maximum differential values are listed in columns in the previous pages of this brochure.
The actuator needs to be selected in terms of force as to:

- guarantee the effective differential pressure across the valve in case of a 3-way valve;
- guarantee the effective differential pressure across the valve and the maximum pressure, at the inlet port of the valve, available from the pump, in case of 2-way valves. Consequently, 2-way valves usually require actuators stronger than those necessary for 3-way valves.

As a consequence of the differential pressure across the valve, the flow is always trying to open the valve.
To keep the plug in the closed position, the actuator must exceed this force (close-off pressure).
Depending on the valve size and on the differential pressure across the valve, we need to select an actuator with a close-off higher than the differential pressure.
The larger is the valve, the more is the force that the actuator needs to have to achieve the close-off.
For 2-way valves with high differential pressure we recommend using our pressure balanced plug valves 2TGA.BT (from ¾" to 2") and 2FGB.B, 2FSA.B, 2FAA.B, 2FGA200B (from DN65 to DN200).
This is a cost-effective alternative to selecting a standard valve with a strong actuator.

Complete details of differential pressure values for all our valves are listed in our Valves_DBL337en datasheet, pdf available online on our website.

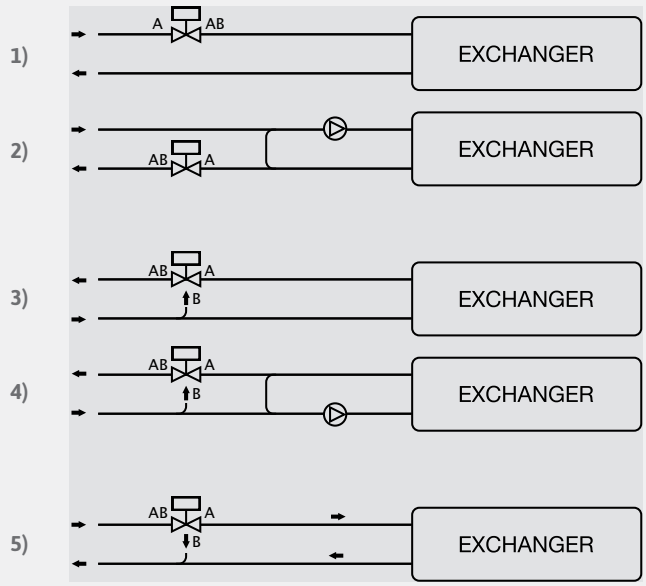

1) 2-way valve: variable flow to the heat exchanger
2) 2-way valve: constant flow to the heat exchanger
3) 3-way valve MIXING: variable flow to the heat exchanger
4) 3-way valve MIXING: constant flow to the heat exchanger
5) 3-way valve DIVERTING: variable flow to the heat exchanger

We recommend using our 3-way valves as mixing, when used as diverting max. differential pressure has to be limited to the 40% of the values listed in our datasheets. If used as diverting, inlet port is AB.B.

Valves and Actuators Compatibility

ZONE AND COMPACT GLOBE VALVES

		ACTUATORS	MVT		MVC				MVX			MCA	MVP
			MVT203S MVT403S	MVT503S	MVC203 MVC403	MVC503	MVC503R	MVC-2-RS	MVX22R MVX42R	MVX52	MVX52B	MCA230L(M) MCA24L(M)	MVP230(M) MVP24(M)
			3 pos. 24 V; 230 V	prop. 24 V	3 pos. 24 V; 230 V	Prop. 24 V	Prop. 24 V	Modbus/BACnet 24 V	2 pos. 24 V; 230 V	Prop. 24 V		2 pos. 24 V; 230 V	2 pos. 24 V; 230 V
			300 N		300 N				140 N			140 N	170 N
PN16 BRASS VALVES													
VSXT	2-way	1/2”-1”	•	•	-	-	•	•	-	-	-	-	-
VMXT	3-way		•	•	-	-	•	•	-	-	-	-	-
VTXT	3-way + bypass	1/2”-3/4”	•	•	-	-	•	•	-	-	-	-	-
PN16 BRASS VALVES													
VSX	2-way	1/2”-1”	-	-	-	-	-	-	•	•	• NORMALLY OPEN*	• NORMALLY OPEN	-
VMX	3-way		-	-	-	-	-	-	•	•	• NORMALLY OPEN*	• NORMALLY OPEN	-
VTX	3-way + bypass	1/2”-3/4”	-	-	-	-	-	-	•	•	• NORMALLY OPEN*	• NORMALLY OPEN	-
PN16 FRP VALVES													
VPS	2-way	1/2”-3/4”	-	-	-	-	-	-	-	-	•	-	•
VPM	3-way		-	-	-	-	-	-	-	-	•	-	•
VPT	3-way + bypass		-	-	-	-	-	-	-	-	•	-	•
PN16 CAST IRON VALVES													
VSB.T-VMB.T	2- and 3-way	3/4”-2”	-	-	•	•	•	•	-	-	-	-	-
2TGA.BT	2 way		-	-	•	•	•	•	-	-	-	-	-
2-3TGB.B	2- and 3-way	1/2”	-	-	With AG74-03	With AG74-03	With AG74-03	With AG74-03	-	-	-	-	-
PN16 BRONZE VALVES													
2-3TBB.T	2- and 3-way	1/2”-2”	-	-	•	•	•	•	-	-	-	-	-

PICVs

		ACTUATORS	MCA	MVR	MVX	MVT		MVC		MVE
			MCA230L MCA24L	MVR24C2 MVR230C2	MVX52B	MVT203S MVT403S	MVT503SB	MVC503R	MVC-2-RS	MVE204S MVE504S MVE504S-2-RS
			2 pos. 24 V; 230 V	2 pos. 24 V; 230 V	Prop. 24 V	3 pos. 24 V; 230 V	Prop. 24 V	Prop. 24 V	Modbus/BACnet 24 V	3 pos. & prop. 24 V; 230 V
			140 N	90 N	140 N	300 N		300 N		400 N
LIBRA										
VLX1-5(P)	2-way	1/2”-1 ½”	•	•	• **	•	•	•	•	-
VLX6P VLX8P	2-way	1 ½”, 2”	-	-	-	-	-	-	-	•

** ATTENTION: MVX52B without power closes VSX, VMX and VTX valves*
*** ATTENTION: MVX52B without power opens VLX valves*

GLOBE VALVES		ACTUATORS	MVB		MVE***		MVE.R (with emergency return)***		MVH			
			MVB22 MVB26 MVB28 MVB46	MVB52 MVB56	MVE.04 MVE.06 MVE.10 MVE.15 MVE.22	MVE.04S MVE.06S MVE.10S MVE.15S MVE.22S	MVE.04R MVE.06R MVE.10R MVE.15R	MVE.04SR MVE.06SR MVE.10SR MVE.15SR	MVH26 MVH46	MVH36 MVH56	MVH56E MVHE3K	MVH56EA MVH56EC
			2 - 3 pos. 24V; 230V	prop. 24V	3 pos. & prop. 24 V; 230 V	3 pos. & prop. 24 V; 230 V short yoke	3 pos. & prop. 24 V; 230 V	3 pos. & prop. 24 V; 230 V short yoke	2 - 3 pos. 24 V; 230 V	prop. pot. or V DC-mA 24 V	3 pos. & prop. 24 V	3 pos. & prop. 24 V spring return
			450 N		400 N, 600 N, 1000 N, 1500 N, 2200 N		400 N, 600 N, 1000 N, 1500 N		1500 N	1500 N	1500 N 3000 N	700 N
PN16 THREADED VALVES												
2-3TGB.B	2- and 3-way threaded	1/2”	•	•	-	-	-	-	-	-	-	-
2-3TGB.F	2- and 3-way threaded	1/2”	-	-	-	•	-	•	-	-	-	-
VSB	2-way threaded	3/4"-2"	•	•	With AG52	With AG63	With AG52	With AG63	With AG62	With AG62	With AG62	With AG62
VMB	3-way threaded		•	•	With AG52	With AG63	With AG52	With AG63	With AG62	With AG62	With AG62	With AG62
VSBP. M	2-way threaded tight close-off	3/4”-2”	•	•	-	-	-	-	-	-	-	-
VMBP. M	3-way threaded tight close-off		•	•	-	-	-	-	-	-	-	-
2-3TBB	2- and 3-way bronze	1/2”-2”	• *	• *	•	• *	•	• *	•	•	• No MVHE3K	•
2-3TIA	2- and 3-way AISI304 stainless steel	20-65	-	-	•	•	•	•	-	-	-	•
PN16 FLANGED VALVES												
VSB. F	2-way slip-on flanges	20 - 50	•	•	With AG52	With AG63	With AG52	With AG63	With AG62	With AG62	With AG62	With AG62
VMB. F	3-way slip-on flanges		•	•	With AG52	With AG63	With AG52	With AG63	With AG62	With AG62	With AG62	With AG62
PN16, 25, 40 FLANGED VALVES												
2FGB	2-way flanged PN16	25-150	-	-	•	-	•	-	•	•	•	•
3FGB	3-way flanged PN16		-	-	•	-	•	-	•	•	•	•
2FGA	2-way flanged PN16	15-100	-	-	•	-	•	-	•	•	•	•
2FSA **	2-way flanged PN25	25-65	-	-	•	-	•	-	•	•	•	•
3FSA **	3-way flanged PN25	25-80	-	-	•	-	•	-	•	•	•	•
2FAA **	2-way flanged PN40	15-80	-	-	•	-	•	-	•	•	•	•
3FAA **	3-way flanged PN40	25-125	-	-	•	-	•	-	•	•	•	•
FLANGED VALVES FOR HIGH CLOSE-OFF PRESSURE												
2FGB.B	2-way flanged PN16	65-150	-	-	•	-	•	-	•	•	•	•
2FSA.B	2-way flanged PN25	25-80	-	-	•	-	•	-	•	•	•	•
2FAA.B	2-way flanged PN40	25-125	-	-	•	-	•	-	•	•	•	•
2FAA150B	2-way double seat PN25	150	-	-	•	-	•	-	•	•	•	•
2FGA200B	2-way double seat PN16	200	-	-	•	-	•	-	•	•	•	•
2-3FIA	2- and 3-way flanged PN16-PN40	25-100	-	-	•	-	•	-	With AG81	With AG81	With AG81	With AG81

** Available on request* ** Also 2FAA.P, 2FAA.T, 3FAA.P, 3FAA.T, 3FSA.S *** MVE-2-RS models are available

Compatible Valves/Linkage Kits

Manufacturer	Model	Way	Type	MVE	MVH	MVH56EA/C
SCHNEIDER ELECTRIC	V241	2-way	Threaded	Compatible	Compatible	Compatible
	V211T	2-way	Threaded	Compatible	Compatible	Compatible
	V212T	2-way	Threaded	Compatible	Compatible	Compatible
	V211	2-way	Flanged	Compatible	Compatible	Compatible
	V212	2-way	Flanged	Compatible	Compatible	Compatible
	VG211	2-way	Flanged	Compatible	Compatible	Compatible
	VG222	2-way	Flanged	Compatible	Compatible	Compatible
	V231	2-way	Flanged	Compatible	Compatible	Compatible
	V232	2-way	Flanged	Compatible	Compatible	Compatible
	V292	2-way	Flanged	Compatible	Compatible	Compatible
	V341	3-way	Threaded	Compatible	Compatible	Compatible
	V311T	3-way	Threaded	Compatible	Compatible	Compatible
	V311	3-way	Flanged	Compatible	Compatible	Compatible
	VG321	3-way	Flanged	Compatible	Compatible	Compatible
	V321	3-way	Flanged	Compatible	Compatible	Compatible
SATCHWELL	VZ	2-way	Threaded	AG53	AG54	AG54
	VSF DN15-50	2-way	Flanged	AG53	AG54	AG54
	VZF DN65 150	2-way	Flanged	AG53	AG54	AG54
	MZ	3-way	Threaded	AG53	AG54	AG54
	MJF DN15-50	3-way	Flanged	AG53	AG54	AG54
	MZF DN 65-150	3-way	Flanged	AG53	AG54	AG54
HONEYWELL	V176A,B	2-way	Flanged	AG60-10	No	No
	V5011A	2-way	Flanged	AG60-10	No	No
	V5011R	2-way	Threaded	AG79	No	No
	V5011S	2-way	Threaded	AG79	No	No
	V5011E	2-way	Threaded	AG79	No	No
	V5013E	2-way	Threaded	AG79	No	No
	V5013R	2-way	Threaded	AG79	No	No
SIEMENS	VVF21 DN 25..80	2-way	Flanged	AG70-10	AG70-10	AG70-10
	VVF21DN ≥100	2-way	Flanged	AG70-14	AG70-14	AG70-14
	VVF31 DN 15..80	2-way	Flanged	AG70-10	AG70-10	AG70-10
	VVF31DN 150	2-way	Flanged	AG70-14	AG70-14	AG70-14
	VVF40 DN 15..80	2-way	Flanged	AG70-10	AG70-10	AG70-10
	VVF40 DN 150	2-way	Flanged	AG70-14	AG70-14	AG70-14
	VVF41 DN 50	2-way	Flanged	AG70-14	AG70-14	AG70-14
	VVF41 DN 65..150	2-way	Flanged	AG70-14	AG70-14	AG70-14
	VVF45 DN 50	2-way	Flanged	AG70-14	AG70-14	AG70-14
	VVF45 DN65..150	2-way	Flanged	AG70-14	AG70-14	AG70-14
	VVF51DN15..40	2-way	Flanged	AG70-10	AG70-10	AG70-10
	VVF52 DN 15..40	2-way	Flanged	AG70-10	AG70-10	AG70-10

Manufacturer	Model	Way	Type	MVE	MVH	MVH56EA/C
SIEMENS	VVF53 DN 15..50	2-way	Flanged	AG70-10	AG70-10	AG70-10
	VVF53 DN 65..150	2-way	Flanged	AG70-10	AG70-10	AG70-10
	VVF61 DN 15..25	2-way	Flanged	AG70-10	AG70-10	AG70-10
	VVF61 DN 40..50	2-way	Flanged	AG70-14	AG70-14	AG70-14
	VVF61 DN 65..150	2-way	Flanged	AG70-14	AG70-14	AG70-14
	VVF61_2 DN 15..50	2-way	Flanged	AG70-10	AG70-10	AG70-10
	VVF61_2 DN 65..150	2-way	Flanged	AG70-10	AG70-10	AG70-10
	VVG41 DN 15.50	2-way	Threaded	AG70-10	AG70-10	AG70-10
	VVG11 DN 25..40	2-way	Threaded	AG70-10	AG70-10	AG70-10
	VXF21DN 25..80	3-way	Flanged	AG70-10	AG70-10	AG70-10
	VXF21DN 100	3-way	Flanged	AG70-14	AG70-14	AG70-14
	VXF31 DN 15..80	3-way	Flanged	AG70-10	AG70-10	AG70-10
	VXF31 DN 100..150	3-way	Flanged	AG70-14	AG70-14	AG70-14
	VXF40 DN 15..80	3-way	Flanged	AG70-10	AG70-10	AG70-10
	VXF40 DN 100..150	3-way	Flanged	AG70-14	AG70-14	AG70-14
	VXF41 DN 50	3-way	Flanged	AG70-14	AG70-14	AG70-14
	VXF41 DN 65..150	3-way	Flanged	AG70-14	AG70-14	AG70-14
	VXF45 DN 50	3-way	Flanged	AG70-14	AG70-14	AG70-14
	VXF45 DN 65..150	3-way	Flanged	AG70-14	AG70-14	AG70-14
	VXF51 DN 15..40	3-way	Flanged	AG70-10	AG70-10	AG70-10
	VXF52 DN 15..40	3-way	Flanged	AG70-10	AG70-10	AG70-10
	VXF53 DN 15..50	3-way	Flanged	AG70-10	AG70-10	AG70-10
	VXF53 DN 65..150	3-way	Flanged	AG70-10	AG70-10	AG70-10
	VXF61 DN 15..25	3-way	Flanged	AG70-10	AG70-10	AG70-10
	VXF61 DN 40..50	3-way	Flanged	AG70-14	AG70-14	AG70-14
	VXF61 DN 65..150	3-way	Flanged	AG70-14	AG70-14	AG70-14
	VXF61_2 DN 15..50	3-way	Flanged	AG70-10	AG70-10	AG70-10
	VXF61_2 DN 65..150	3-way	Flanged	AG70-10	AG70-10	AG70-10
	VXG41 DN 15..50	3-way	Threaded	AG70-10	AG70-10	AG70-10
	VXG11 DN 25..40	3-way	Threaded	AG70-10	AG70-10	AG70-10
BELIMO	H6..N DN 15..100	2 way	Flanged	AG70-10	No	No
	H7..N DN 15..100	3 way	Flanged	AG70-10	No	No
	H2...X-S	2 way	Threaded	AG82	No	No
	H3...X-S	3 way	Threaded	AG82	No	No
JOHNSON CONTROLS	VB7816	3-way	Threaded	AG66	No	No
DANFOSS	VF2	2-way	Flanged	AG60-07	No	No
	VF3	3-way	Flanged	AG60-07	No	No
MUT	MK DN50 - 150	3-way	Flanged	AG69	No	No

2F & 3F Valves Cross Reference with Old CONTROLLI Valves

	Old model	New model
2-way valves PN40		
Steel valves	SSAA15R	2FAA15R2
	SSAA15	2FAA15
	SSAA20	2FAA20
	SSAA25	2FAA25
	SSAA32	2FAA32
	SSAA40	2FAA40
	SSAA50	2FAA50
	SSAA65	2FAA65
	SSAA80	2FAA80
Steel valves for very high temperatures	SSAACP15R	2FAA15PR2
	SSAACP15	2FAA15P
	SSAACP20	2FAA20P
	SSAACP25	2FAA25P
	SSAACP32	2FAA32P
	SSAACP40	2FAA40P
	SSAACP50	2FAA50P
	SSAACP65	2FAA65P
	SSAACP80	2FAA80P
Steel valves for very low temperatures	SSAACP15RB	2FAA15TR2
	SSAACP15B	2FAA15T
	SSAACP20B	2FAA20T
	SSAACP25B	2FAA25T
	SSAACP32B	2FAA32T
	SSAACP40B	2FAA40T
	SSAACP50B	2FAA50T
	SSAACP65B	2FAA65T
	SSAACP80B	2FAA80T
Balanced plug valves	VBAA25	2FAA25B
	VBAA32	2FAA32B
	VBAA40	2FAA40B
	VBAA50	2FAA50B
	VBAA65	2FAA65B
	VBAA80	2FAA80B
	VBAA100	2FAA100B
	VBAA125	2FAA125B
3-way valves PN25		
Spheroidal cast iron valves	VMS25R	3FSA25R4
	VMS25I	3FSA25R7
	VMS25	3FSA25
	VMS32	3FSA32
	VMS40	3FSA40
	VMS50	3FSA50
	VMS65	3FSA65
	3VSA80	3FSA80
High temperature valves	VMSTS25R	3FSA25SR4
	VMSTS25I	3FSA25SR7
	VMSTS25	3FSA25S
	VMSTS32	3FSA32S
	VMSTS40	3FSA40S
	VMSTS50	3FSA50S
	VMSTS65	3FSA65S
	3VSATS80	3FSA80S

	Old model	New model
2-way valves PN16		
Cast iron valves with s/steel internal parts	SSGA11	2FGA15R0
	SSGA12	2FGA15R1
	SSGA15R	2FGA15R2
	SSGA1	2FGA15R3
	SSGA15	2FGA15
	SSGA20	2FGA20
	SSGA25	2FGA25
	SSGA32	2FGA32
	SSGA40	2FGA40
	SSGA50	2FGA50
	SSGA65	2FGA65
	SSGA80	2FGA80
	SSGA100	2FGA100
Cast iron valves	VSG25R	2FGB25R4
	VSG25I	2FGB25R7
	VSG25	2FGB25
	VSG40	2FGB40
	VSG50	2FGB50
	VSG65	2FGB65
	VSG80	2FGB80
	VSG100	2FGB100
	VSG125	2FGB125
	VSG150	2FGB150
Balanced plug valves	VBG65	2FGB65B
	VBG80	2FGB80B
	VBG100	2FGB100B
	VBG125	2FGB125B
	VBG150	2FGB150B
	DSGA200	2FGA200B
3-way valves PN16		
Cast iron valves	VMB1625R	3FGB25R4
	VMB1625I	3FGB25R7
	VMB1625	3FGB25
	VMB1640R	3FGB40R19
	VMB1640	3FGB40
	VMB1650	3FGB50
	VMB1665	3FGB65
	VMB1680	3FGB80
	VMB16100	3FGB100
	VMB16125	3FGB125
	VMB16150	3FGB150

	Old model	New model
2-way valves PN25		
Spheroidal cast iron valves	VSS25R	2FSA25R4
	VSS25I	2FSA25R7
	VSS25	2FSA25
	VSS32	2FSA32
	VSS40	2FSA40
	VSS50	2FSA50
	VSS65	2FSA65
Balanced plug valves	VBS25R	2FSA25BR4
	VBS25I	2FSA25BR7
	VBS25	2FSA25B
	VBS32	2FSA32B
	VBS40	2FSA40B
	VBS50	2FSA50B
	VBS65	2FSA65B
	VBS80	2FSA80B
	DSAA150	2FAA150B
3-way valves PN40		
Steel valves	3VAA25R	3FAA25R4
	3VAA25I	3FAA25R7
	3VAA25	3FAA25
	3VAA32	3FAA32
	3VAA40	3FAA40
	3VAA50	3FAA50
	3VAA65	3FAA65
	3VAA80	3FAA80
	3VAA100	3FAA100
	3VAA125	3FAA125
Steel valves for very high temperatures	3VAACP25R	3FAA25PR4
	3VAACP25I	3FAA25PR7
	3VAACP25	3FAA25P
	3VAACP32	3FAA32P
	3VAACP40	3FAA40P
	3VAACP50	3FAA50P
	3VAACP65	3FAA65P
	3VAACP80	3FAA80P
	3VAACP100	3FAA100P
	3VAACP125	3FAA125P
Steel valves for very low temperatures	3VAACP25RB	3FAA25TR4
	3VAACP25IB	3FAA25TR7
	3VAACP25B	3FAA25T
	3VAACP32B	3FAA32T
	3VAACP40B	3FAA40T
	3VAACP50B	3FAA50T
	3VAACP65B	3FAA65T
	3VAACP80B	3FAA80T
	3VAACP100B	3FAA100T
	3VAACP125B	3FAA125T

Old model	New model	
MVL-SH actuators	MVH-MVE actuators	Description
245	248	Stem heater for MVH-MVE with flanged valves
245F		
246	244	Stem heater for MVH-MVE with VSB-VMB-VSBF-VMBF valves
AG31	AG62	Linkage for MVH actuators with VSB-VMB-VSBF-VMBF valves
DMVL	DMVH	Aux. microswitches for MVH
MVLFS5	MVHFS5	4-20 mA input signal
MVLPA2	MVHPA2	1 kohm aux. potentiometer for MVH26
MVLPA4	MVHPA4	1 kohm aux. potentiometer for MVH46
MVLHT	MVHT	High temperature spacer

Replacing Old CONTROLLI Actuators

In the event of replacing an old CONTROLLI actuator mounted on one of the old valves listed below, here is the equivalent MVH and MVE actuators model to be used:

Old model		New model		
SH242	=	MVH26	+	AG51 or AG62 valve/actuator linkage kit (see LINKAGE KITS chart below)
SH222		MVH46		
SH522		MVH56		
MVL26		MVH26		
MVL36		MVH36		
MVL46		MVH46		
MVL56		MVH56		
MVL56F		MVH56E		
MVL56A / MVL56FA/MVL46A		MVH56EA		
MVL56C / MVL56FC/MVL46C		MVH56EC		
MVL3K		MVHE3K		
MVF54	=	MVE506		No linkage kit required
MVF58		MVE510		
MVF515		MVE515		
MVF54S		MVE506S		
MVF58S		MVE510S		
MVF515S		MVE515S		
MVH56F		MVH56E		
MVH56FA		MVH56EA		
MVH56FC		MVH56EC		
MVH3K		MVHE3K		
MVT28	=	MVT203S		No linkage kit required
MVT44		MVT403S		
MVT56		MVT503S		
MVT56S		MVT503S		
MVT57		MVT503S		
MVT56L		MVT503S		
MVT203	=	MVC203	+	55061 kit
MVT403		MVC403		
MVT503		MVC503		

Linkage Kits for MVH, MVE & MVB Actuators

iSMA CONTROLLI valves models	MVH	MVE	MVB
OBSOLETE MODELS			
S300	No	No	AG40
V500	No	No	AG22
OLD FLANGED VALVES			
VSG, VMB16, VBG, SS, DS, VSS, VBS, VBAA, 3V, VMS	AG51		No
SS, DS, VS, VBS, 3V, VM + MVLHT DN15-65mm	AG64	No	No
SS, DS, VS, VBS, 3V, VM + MVLHT DN80-200mm	AG65	No	No
EXISTING THREADED VALVES			
2TGB.B, 3TGB.B	No	No	Compatible
2TGB.F, 3TGB.F	No	Compatible	No
VSB, VMB	AG62	AG52 / AG63 *	Compatible
EXSISTING VALVES WITH SLIP-ON FLANGES			
VSB.F, VMB.F	AG62	AG52 / AG63 *	Compatible
EXSISTING FLANGED VALVES			
2F, 3F	Compatible	Compatible	No

*AG52 (MVE) & AG63 (MVE.S)

Valve Sizing Diagram for Fluids

$$Kvs = \frac{Q \cdot 10}{\sqrt{\Delta pv}}$$

Q = flow rate in m^3/h
Δpv = pressure drop in kPa

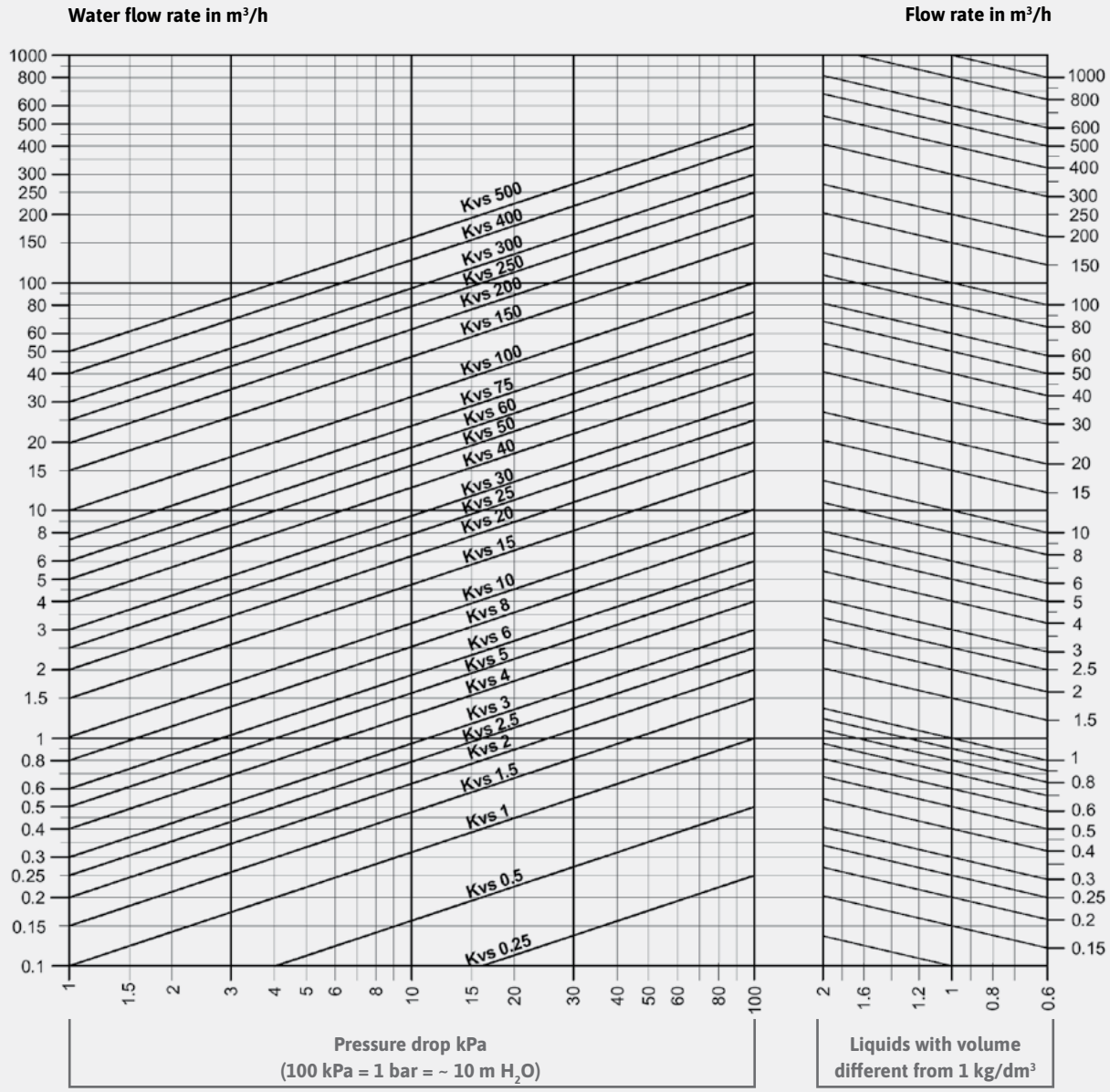

The recommended valve pressure drop must be at least equal to the load.

Example for fluids with relative density 1 kg/dm³ (water)
In order to size a control valve with:
FLOW RATE: 7,5 m^3/h of water
PRESSURE DROP: 55 kPa
Use the diagram as follows:
Identify the crossing point between the line starting from the flow rate value (7.5 m^3/h) and from the pressure drop value (55 kPa).
This point corresponds to the required flow coefficient, i.e., Kvs 10. Therefore, the control valve must have Kvs 10.

Example for liquids having relative density different from 1 kg/dm³ and diathermic oil
In order to size a control valve with:
FLOW RATE : 150 m^3/h having (0.9 kg/dm^3) relative density
PRESSURE DROP: 80 kPa
Use the diagram as follows:
Identify the crossing point (right side of the diagram) between the line starting from the relative density value (0.9 kg/dm^3) and the inclined line starting from the flow rate value (150 m^3/h).
Identify the crossing point between the line starting from the crossing point above and the other from the pressure drop value (80 kPa).
This point corresponds to the required flow coefficient. Therefore, the control valve must have approximately Kvs 160.

Valve Sizing Diagram for Steam

iSMACONTROLLI

$$Kvs = \frac{Q}{22{,}8 \cdot \sqrt{\Delta pv \cdot Pu}}$$

Q = flow rate in Kg/h
Δpv = pressure drop in bar
Pu = downstream absolute pressure bar

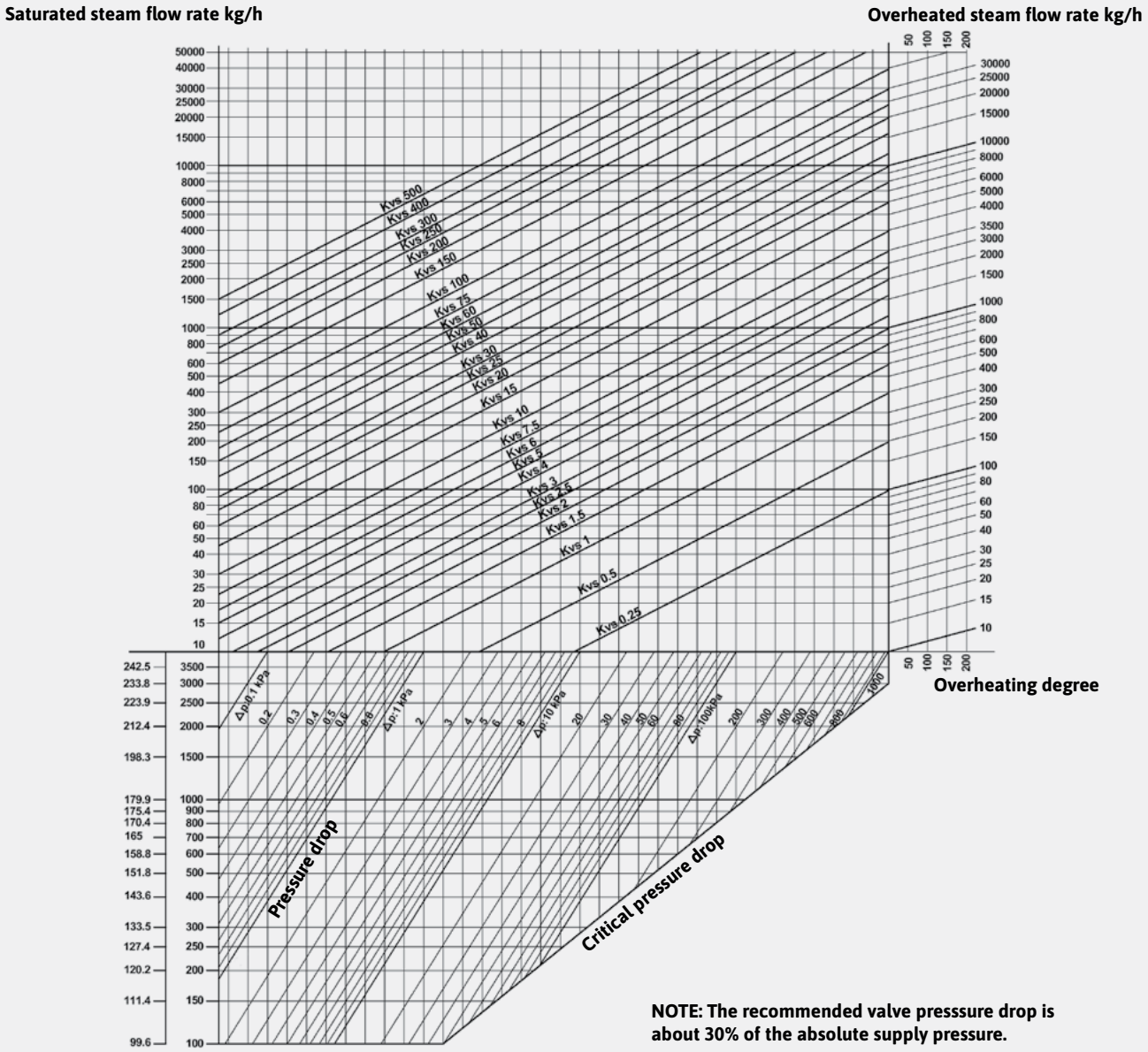

NOTE: The recommended valve presssure drop is about 30% of the absolute supply pressure.

Example for saturated steam:

FLOW RATE:	4700 kg/h of saturated steam
ABSOLUTE PRESSURE UPSTREAM:	850 kPa
PRESSURE DROP:	160 kPa

Use the diagram as follows:
- Identify the crossing point between the line starting from absolute pressure upstream the valve (850 kPa) and the inclined line corresponding to the pressure drop value (160 kPa).
- Identify the crossing point between the line starting from the crossing point above and the line from the flow rate value (4700 kg/h).

This point corresponds to the required flow rate coefficient: Kvs 63.

Example for overheated steam:

FLOW RATE:	140 kg/h of overheated steam
ABSOLUTE PRESSURE UPSTREAM:	350 kPa
TEMPERATURE:	209°C
PRESSURE DROP:	100 kPa

Calculate the overheating degree of steam as follows:
- On the left side of the diagram, read the temperature value corresponding to 350 kPa (139°C). The overheating degree is:
  209 – 139 = 70°C

Use the diagram as follows:
- Identify the crossing point "A" (right side of the diagram) between the line starting from the overheating value (70°C) and the inclined line corresponding to the flow rate value (140 kg/h).
- Identify the crossing point "B" between the line starting from the value of pressure upstream (350 kPa) and the inclined line corresponding to the value of pressure drop (100 kPa).
- Identify the crossing point between the line starting from the points "A" and "B".

Valve Sizing

How to Calculate Kvs

Flow coefficient Kvs is the flow rate of water in m^3/h passing through a fully open valve at a 100 kPa pressure drop.

a) Liquids $Kvs = 10 \times Q \times \sqrt{\frac{r}{Dp}}$

Q = flow rate m^3/h
Dp = pressure drop (kPa)
r = relative density

The Dp pressure drop should be determined as follows:
Equal or higher than the Dp of the circuit under control, in case of variable flow applications.
Equal or higher than the Dp of the supply circuit, in case of constant flow applications

b) Steam $Kvs = \frac{100 \times G \times C}{20.3 \sqrt{P_2 \times Dpv}}$

G = flow rate (kg/h)
C = 1 + 0.0013 (t-ts)
t = steam temperature in working conditions
ts = saturated steam temperature at P_2 pressure
P_2 = pressure downstream (kPa)
Dpv = pressure drop (kPa)

Choose the valve with the Kvs closest to the calculated one.

Water Systems

2-way valve
For this application, the pressure drop through the valve must be high, in order to have a good control flow characteristic and a properly working system.
1) The valve pressure drop must be 30 to 50% of the pressure upstream the valve.
2) The valve pressure drop must be equal to, or higher than, the pressure drop of the coil or heat exchanger under control, in particular:

TEMPERATURE DROP OF HEAT EXCHANGER	DESIGN OF VALVE PRESSURE DROP
30 °C	Equal to pressure drop of heat exchanger
20 °C	Twice as pressure drop of heat exchanger
10 °C	Three times as pressure drop of heat exchanger

3-way mixing valve
For mixing valve, a high pressure drop is not normally required even when used in primary and secondary water circuits to control supply temperature to users.
As a general rule, the valve must have a pressure drop similar to the one of the heat exchanger.

3-way diverting valve
Three-way diverting valves are used to control flow to heat exchanger and, therefore, the pressure drop through the valve. For proportional systems it must be high.

Note:
When selecting a pressure drop, you must not exceed the mentioned values in the technical documentation because an undersized valve could produce:
- noisy operation and vibration of the plug;
- rapid wear of plug and seat due to high speed of the fluid through the valve.

Overheated Water Systems

For this application, the valves can be 2- or 3-way type.
The valve pressure drop must be high, in order to have a good control flow characteristic and a properly working system.
The principles and rules for correct sizing are the same as “Water Systems”.

Steam Systems

For low pressure steam systems (up to 2 bar), the pressure drop through the valve must be from 60 to 80 % of the pressure available upstream the valve.

STEAM PRESSURE UPSTREAM THE VALVE	VALVE PRESSURE DROP
0.5 bar (50 kPa)	40 kPa
1.0 bar (100 kPa)	70 kPa

For high pressure steam systems (above 2 bar), the pressure drop through the valve must be from 30 to 40% of the pressure available upstream the valve.

STEAM PRESSURE UPSTREAM THE VALVE	VALVE PRESSURE DROP
200 kPa	80 kPa
600 kPa	200 kPa
1,000 kPa	300 kPa

For on/off valves there are no particular rules to follow: pressure drop may be 10 to 20% of inlet pressure, but the valve is normally pipe sized.

Note:
Do not size valves for high pressure steam with pressure drop higher than 50% of absolute pressure upstream: beyond this percentage thermodynamic problems could affect valve efficiency and life.

Heat Transfer Oil Systems

The most commonly used valve type is a 3-way with linear characteristics, in order to ensure a constant flow to the boiler by constant speed.
2-way valves can be used for several low-power users and wherever a balanced-plug valve is mounted between supply and return boiler.
The pressure drop of 3-way valves must be at least equal to or higher than the one of the heat exchanger.
For a single user control, the valve must have a pressure drop from 30 to 50% of the system pressure drop.
For two-way valves, see also the “Water Systems” section.

Control Valves & Actuators

iSMA CONTROLLI S.p.A.

Via Carlo Levi 52
16010 Sant'Olcese (GE),
Italy

Contact

phone: +39 010 73 06 1
info@ismacontrolli.com
www.ismacontrolli.com

Control Valves & Actuators
Issue No.1.6,
November, 2024

Find our complete product range at:
about.ismacontrolli.com/en/solutions